SOCCER FIELD IMPROVEMENTS

WILLIAM PATERSON UNIVERSITY

WAYNE, NEW JERSEY

JANUARY 11, 2016

CONSTRUCTION DOCUMENTS

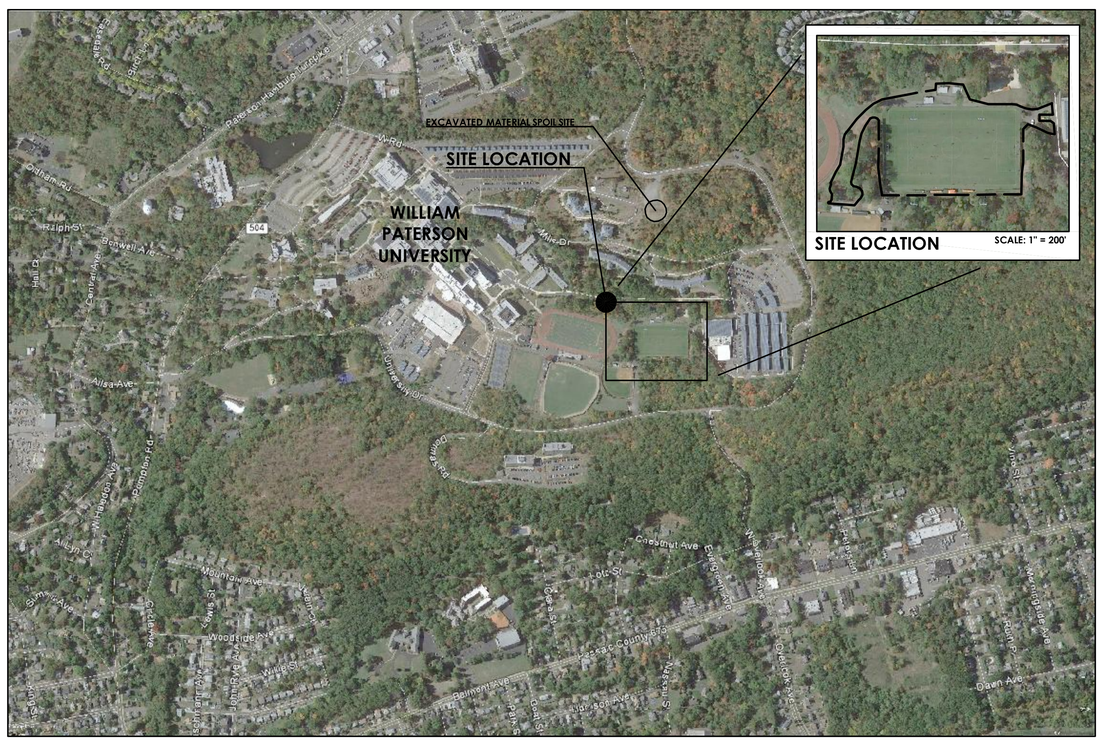

SITE LOCATION MAP

SCALE: 1" = 500'-0"

0 500 1000
Scale in feet

Sheet List Table

Sheet Number	Sheet Title
GENERAL	
G-000	COVER SHEET
CIVIL	
C-001	GENERAL NOTES
C-002	EXISTING CONDITIONS PLAN
C-003	DEMOLITION PLAN
C-004	ACCESSIBILITY PLAN
C-101	OVERALL SITE LAYOUT PLAN
C-102	SITE LAYOUT PLAN
C-103	FIELD LAYOUT PLAN
C-104	FIELD DIMENSION PLAN
C-201	OVERALL GRADING PLAN
C-202	SITE GRADING PLAN
C-203	FIELD GRADING PLAN
C-204	FIELD DRAINAGE PLAN
C-301	OVERALL SITE UTILITY PLAN
C-302	FIELD UTILITY PLAN
C-311	PUMP STATION
C-401	GRANDSTAND SEATING PLAN
C-402	GRANDSTAND FOUNDATION PLAN
C-403	GRANDSTAND SECTION
C-410	PRESS BOX
C-411	PRESS BOX
C-412	PRESS BOX
C-413	PRESS BOX
C-414	PRESS BOX
C-501	SITE LANDSCAPE PLAN
C-601	SITE DETAILS
C-602	SITE DETAILS
C-603	SITE DETAILS
C-604	SITE DETAILS
C-605	SITE DETAILS
C-606	SITE DETAILS
C-607	SITE DETAILS
C-608	SITE DETAILS
C-609	SITE DETAILS
EROSION & SEDIMENT CONTROL	
SE-101	SOIL EROSION AND SEDIMENT CONTROL PLAN
SE-102	SOIL EROSION AND SEDIMENT CONTROL DETAILS AND NOTES
ELECTRICAL	
E-001	ELECTRICAL LEGEND, ABBREVIATIONS AND SYMBOLS
E-100	ELECTRICAL SITE POWER PLAN
E-200	ELECTRICAL SITE LIGHTING PLAN
E-500	ELECTRICAL LIGHTING AND EQUIPMENT SCHEDULES, WIRING DIAGRAMS
E-600	ELECTRICAL ONE-LINE DIAGRAM
E-700	ELECTRICAL DETAILS
RESTROOM BUILDING: ARCHITECTURAL	
A-101	FLOOR PLAN, ELEVATIONS, SCHEDULES & NOTES
RESTROOM BUILDING: STRUCTURAL	
S-101	FOUNDATION PLAN, DETAILS, CROSS SECTION & NOTES
S-102	STRUCTURAL NOTES
RESTROOM BUILDING: MECHANICAL	
M-1	RESTROOM BUILDING MECHANICAL PLAN
RESTROOM BUILDING: PLUMBING	
P-0	LEGEND, ABBREVIATIONS, AND SCHEDULES
P-1	RESTROOM BUILDING PLUMBING PLAN
RESTROOM BUILDING: ELECTRICAL	
E-1	RESTROOM BUILDING ELECTRICAL PLAN

Drawing Copyright © 2015

CHA
6 Campus Drive
Parsippany, NJ 07054-4406
973.538.3225 - www.chacompanies.com

IT IS A VIOLATION OF LAW FOR ANY PERSON, UNLESS THEY ARE ACTING UNDER THE DIRECTION OF A LICENSED PROFESSIONAL ENGINEER, ARCHITECT, LANDSCAPE ARCHITECT OR LAND SURVEYOR TO ALTER AN ITEM IN ANY WAY. IF AN ITEM BEARING THE STAMP OF A LICENSED PROFESSIONAL IS ALTERED, THE ALTERING ENGINEER, ARCHITECT, LANDSCAPE ARCHITECT OR LAND SURVEYOR SHALL STAMP THE DOCUMENT AND INCLUDE THE NOTATION "ALTERED BY" FOLLOWED BY THEIR SIGNATURE, THE DATE OF SUCH ALTERATION, AND A SPECIFIC DESCRIPTION OF THE ALTERATION.

PIONEERS

WILLIAM PATERSON UNIVERSITY

SOCCER FIELD IMPROVEMENTS

300 POMPTON RD.
WAYNE, NJ 07470

No.	Submittal / Revision	App'd.	By	Date
1	CONSTRUCTION DOCUMENTS	DD	TM	01/11/16

COVER SHEET

Designed By:	Drawn By:	Checked By:
WM	TM	DD
Issue Date: 01/11/2016	Project No: 30059	Scale: AS SHOWN

Drawing No.:

G-000

File: V:\PROJECTS\WMO\30059-27-12\CADD_ACAD\G000-30059.DWG
Saved: 1/7/2016 3:45:02 PM Plotted: 1/13/2016 1:15:41 PM Current User: Merklein, Tim LastSavedBy: 3512

GENERAL NOTES

1. IT IS THE CONTRACTOR'S RESPONSIBILITY TO EXAMINE ALL PLAN SHEETS AND SPECIFICATIONS, AND COORDINATE ALL WORK AS REQUIRED.

2. THE ENGINEER SHALL BE NOTIFIED IN WRITING OF ANY CONDITIONS THAT VARY FROM THOSE SHOWN ON THE PLANS. THE CONTRACTOR'S WORK SHALL NOT VARY FROM THE PLANS WITHOUT THE EXPRESSED, WRITTEN APPROVAL OF THE ENGINEER.

3. THE CONTRACTOR SHALL RESTORE LAWNS, DRIVEWAYS, CULVERTS, SIGNS AND OTHER PUBLIC OR PRIVATE PROPERTY DAMAGED OR REMOVED TO AT LEAST AS GOOD A CONDITION AS BEFORE BEING DISTURBED AS DETERMINED BY THE ENGINEER. ANY DAMAGED TREES, SHRUBS, AND/OR HEDGES SHALL BE REPLACED AT THE CONTRACTOR'S EXPENSE.

4. THE CONTRACTOR IS INSTRUCTED TO COOPERATE WITH ANY AND ALL OTHER CONTRACTORS PERFORMING WORK ON THIS JOB SITE DURING THE PERFORMANCE OF THIS CONTRACT.

5. ALL WORK SHALL BE DONE IN STRICT COMPLIANCE WITH ALL APPLICABLE NATIONAL, STATE, AND LOCAL CODES, STANDARDS, ORDINANCES, RULES, REGULATIONS, AND PERMITS.

6. THE CONTRACTOR SHALL PROTECT EXISTING PROPERTY LINE MONUMENTATION. ANY MONUMENTATION DISTURBED OR DESTROYED, AS JUDGED BY THE ENGINEER, SHALL BE REPLACED AT THE CONTRACTOR'S EXPENSE UNDER THE SUPERVISION OF A NEW JERSEY STATE LICENSED LAND SURVEYOR.

7. THE ENGINEER RESERVES THE RIGHT TO EXAMINE ANY WORK DONE ON THIS PROJECT AT ANY TIME TO DETERMINE THE CONFORMANCE WITH THE REQUIREMENTS OF THE CONTRACT DOCUMENTS OF THIS PROJECT, AS INTENDED AND INTERPRETED BY THE ENGINEER.

8. MISCELLANEOUS WORK NOT SPECIFICALLY SHOWN ON THE CONTRACT DRAWINGS SUCH AS PATCHING, BLOCKING, TRIMMING, ETC., SHALL BE PERFORMED TO MAKE THE WORK COMPLETE.

9. THE CONTRACTOR SHALL:
A. VERIFY ALL CONDITIONS IN THE FIELD PRIOR TO COMMENCEMENT OF WORK AND NOTIFY THE ENGINEER OF ANY DISCREPANCIES.
B. EXAMINE THE SITE AND INCLUDE IN HIS WORK THE EFFECT OF ALL EXISTING CONDITIONS ON THE WORK.
C. PROVIDE AND INSTALL ALL MATERIALS AND PERFORM ALL WORK IN ACCORDANCE WITH RECOGNIZED GOOD STANDARD PRACTICE.

10. ALL TRENCH EXCAVATION AND ANY REQUIRED SHEETING AND SHORING SHALL BE DONE IN ACCORDANCE WITH THE LATEST REVISIONS OF OSHA REGULATIONS FOR CONSTRUCTION. SHEET PILING SHALL BE DESIGNED AND SEALED BY A NEW JERSEY STATE PROFESSIONAL ENGINEER.

11. THE CONTRACTOR SHALL MAINTAIN ACCESS TO ALL COMMERCIAL, COLLEGE/CAMPUS, AND PUBLIC PROPERTIES WHENEVER POSSIBLE OR AS DIRECTED BY THE ENGINEER.

12. THE CONTRACTOR SHALL TAKE CARE TO PREVENT DAMAGE TO EXISTING UTILITIES. DAMAGED UTILITIES SHALL BE IMMEDIATELY REPAIRED BY THE CONTRACTOR AT THE CONTRACTOR'S EXPENSE.

13. ALL AREAS WHERE NATURAL VEGETATION AND/OR SPECIMEN TREES ARE TO REMAIN SHALL BE PROTECTED BY THE ERECTION OF FENCING, AND NO DISTURBANCE SHALL OCCUR PRIOR TO INSPECTION BY THE TOWNSHIP ENGINEER AND THE ISSUANCE OF WRITTEN AUTHORIZATION TO PROCEED WITH CONSTRUCTION. THESE PROTECTIVE MEASURES SHALL NOT BE ALTERED OR REMOVED WITHOUT THE APPROVAL OF THE TOWNSHIP ENGINEER. ANY TREES DAMAGED AS A RESULT OF CONSTRUCTION ACTIVITY ARE TO BE REPLACED BY THE CONTRACTOR, IN KIND, AT HIS EXPENSE.

14. ALL UTILITY WORK INVOLVING CONNECTIONS TO EXISTING SYSTEMS SHALL BE COORDINATED WITH THE ENGINEER AND THE UTILITY OWNER. NOTIFY THE OWNER AND ENGINEER AT 2 WEEKS AND AGAIN AT LEAST 72 HOURS PRIOR TO EACH AND EVERY CONNECTION THAT IS MADE.

15. CONSTRUCTION OF ALL PROPOSED UTILITIES MUST BEGIN AT ITS POINT OF CONNECTION TO THE EXISTING UTILITY, OR AT THE LOWEST POINT IN THE SYSTEM. RIMS, GRATES, INVERTS, CLEARANCES AND LOCATIONS AT CROSSINGS MUST BE VERIFIED PRIOR TO THE COMMENCEMENT OF CONSTRUCTION.

16. THE CONTRACTOR IS HEREBY NOTIFIED THAT HE SHALL BE IN COMPLIANCE AT ALL TIMES WITH THE REQUIREMENTS OF THE NJ PROXIMITY ACT CONCERNING THE LOCATION AND OPERATION OF ANY EQUIPMENT ADJACENT TO OR IN THE VICINITY OF ANY UTILITY LINES.

17. THE CONTRACTOR SHALL MAINTAIN FLOW FOR ALL EXISTING UTILITIES.

18. SEEDING AND GRADING LIMITS SHALL INCLUDE ALL AREAS WHICH ARE PART OF NEW CONSTRUCTION AND AREAS DISTURBED BY CONSTRUCTION PROCEDURES, EQUIPMENT AND VEHICLES.

19. THE CONTRACTOR SHALL SUBMIT A CONSTRUCTION STAGING/SEQUENCE OF WORK PLAN TO THE OWNER FOR REVIEW AND APPROVAL WITHIN 14 CALENDAR DAYS OF THE AWARD OF THIS CONTRACT.

20. THE CONTRACTOR IS RESPONSIBLE FOR ALL SOIL EROSION CONTROL ON THIS PROJECT. THE CONTRACTOR IS REQUIRED TO COMPLY WITH ALL PROVISIONS OF THE APPROVED SOIL EROSION & SEDIMENT CONTROL PLANS. ALL ASPECTS OF THIS CERTIFICATION SHALL BE IMPLEMENTED PRIOR TO COMMENCEMENT OF CONSTRUCTION. THE FREEHOLD SOIL CONSERVATION DISTRICT SHALL BE NOTIFIED IN WRITING AT LEAST 72 HOURS BEFORE LAND DISTURBANCE.

21. THESE DRAWINGS DO NOT INCLUDE NECESSARY COMPONENTS FOR CONSTRUCTION SAFETY OR THE SAFETY OF CONSTRUCTION PERSONNEL OR TRANSIENTS, WHICH ARE THE RESPONSIBILITY OF THE CONTRACTORS.

22. THE OWNER SHALL OBTAIN ALL PERMITS, INSPECTIONS, CERTIFICATIONS, ETC. WHICH ARE REQUIRED BY LAW TO BE OBTAINED BY THE CONTRACTOR. THE CONTRACTOR SHALL PAY ALL CHARGES AND FEES, AND FURNISH ANY BONDS AND INSURANCE REQUIRED BY THOSE PERMITS.

23. THE CONTRACTOR SHALL CONDUCT EXPLORATORY TEST PITS AS REQUIRED TO VERIFY UNDERGROUND CONDITIONS.

24. THE CONTRACTOR SHALL EXERCISE CAUTION WHEN OPERATING CONSTRUCTION EQUIPMENT OVER NEW UTILITIES TRENCHES. THE CONTRACTOR SHALL BE RESPONSIBLE FOR PLACING A MINIMUM OF TWO FEET OF COVER OVER UTILITY LINES PRIOR TO OPERATION OF VEHICLES AND MACHINERY.

25. THE PLANS SHOW SUBSURFACE STRUCTURES, ABOVE-GROUND STRUCTURES AND/OR UTILITIES FROM FIELD LOCATION AND RECORD MAPPING, EXACT LOCATION OF WHICH MAY VARY FROM THE LOCATIONS INDICATED. IN PARTICULAR, THE CONTRACTOR IS WARNED THAT THE EXACT OR EVEN APPROXIMATE LOCATION OF SUCH PIPELINES, SUBSURFACE STRUCTURES AND/OR UTILITIES IN THE AREA MAY BE DIFFERENT FROM THAT SHOWN OR MAY NOT BE SHOWN, AND IT SHALL BE HIS RESPONSIBILITY TO PROCEED WITH GREAT CARE IN EXECUTING ANY WORK. 3 FULL BUSINESS DAYS BEFORE YOU DIG OR DRILL, CALL THE NEW JERSEY ONE-CALL AT: 8-1-1 OR 1-800-272-1000.

GENERAL SITE GRADING NOTES

1. PROPOSED GRADES SHALL BLEND SMOOTHLY WITH EXISTING ELEVATIONS.

2. THE CONTRACTOR SHALL STAKE OUT ALL GRADES IN THE FIELD PRIOR TO CONSTRUCTION AND NOTIFY THE ENGINEER IN WRITING OF ANY DISCREPANCIES. THE ENGINEER SHALL APPROVE STAKED GRADES.

3. THE CONTRACTOR SHALL BE RESPONSIBLE FOR DEWATERING AND THE MAINTENANCE OF SURFACE DRAINAGE DURING THE COURSE OF WORK. THE CONTRACTOR SHALL MAINTAIN EXISTING DRAINAGE PATTERNS THROUGHOUT THE PERIOD OF CONSTRUCTION.

SURVEY NOTES

1. BASE MAPPING PREPARED BY CHA FROM A MAY 2015 FIELD SURVEY.

2. NORTH ORIENTATION IS TRUE NORTH BASED ON GPS OBSERVATION TAKEN AT THE TIME OF THE FIELD SURVEY. MAPPING PREPARED ON NAD83 NEW JERSEY STATE PLANE, US FOOT.

3. CONTOURS AND ELEVATIONS ARE SHOWN ON NAVD88 VERTICAL DATUM BASED ON GPS OBSERVATIONS.

4. UNDERGROUND UTILITIES, STRUCTURES AND FACILITIES HAVE BEEN SHOWN FROM SURFACE LOCATIONS COMBINED WITH AVAILABLE RECORD PLANS. THEIR ACTUAL LOCATION MAY VARY SOMEWHAT FROM WHAT IS SHOWN AND OTHERS MAY EXIST. SIZE, TYPE AND LOCATION OF ALL UTILITIES AND STRUCTURES MUST BE VERIFIED BY PROPER AUTHORITIES PRIOR TO ANY AND ALL CONSTRUCTION. CALL DIG SAFE PRIOR TO ANY EXCAVATION.

5. WETLAND DELINEATION COMPETED BY CHA ON 5-27-15.

GENERAL SITE REMOVAL NOTES

1. ALL ORGANIC CONSTRUCTION DEBRIS, SUCH AS TREES, BRUSH, OR SOD SHALL BE DISPOSED OF OFF-SITE IN A LEGAL MANNER, AT THE CONTRACTOR'S EXPENSE.

2. THE CONTRACTOR SHALL EXERCISE CARE DURING REMOVAL OPERATIONS. ANY ITEMS INDICATED TO REMAIN THAT ARE DAMAGED DURING REMOVAL OPERATIONS SHALL BE REPAIRED OR REPLACED IN KIND, BY THE CONTRACTOR, AT NO COST TO THE OWNER.

3. ALL UNSUITABLE EXCAVATED MATERIAL, SUCH AS ROCK, SHALL BE DISPOSED OF AT THE TOWER SITE LOCATED ON CAMPUS APPROXIMATELY 1/4 MILE FROM PROJECT SITE (SEE G-000 PROJECT LOCATION MAP).

4. NO TOPSOIL SHALL BE REMOVED FROM THE SITE. EXCESS MATERIAL MAY BE DISPOSED OF AT TOWER SITE LOCATED ON CAMPUS APPROXIMATELY 1/4 MILE FROM PROJECT SITE (SEE G-000 PROJECT LOCATION MAP). CONTRACTOR SHALL BE RESPONSIBLE FOR EROSION & SEDIMENT CONTROL OF STOCKPILE, GRADING STOCKPILE TO PROVIDE SUITABLE SLOPE FOR MOWING, AND SEEDING.

6. THE CONTRACTOR SHALL AVOID OR MINIMIZE THE AMOUNT OF DOWNTIME OF UTILITY SERVICE INTERRUPTION WHEN REMOVING AND DISPOSING OF EXISTING ELECTRICAL, STREET LIGHTING, SIGNAL (FIBER), TELEPHONE, CABLE TV, WATER AND SEWER SYSTEM COMPONENTS. CONTRACTOR IS RESPONSIBLE FOR MAKING ALL TEMPORARY UTILITY CONNECTS NECESSARY TO KEEP THE DISRUPTED UTILITY SYSTEMS ACTIVE DURING CONSTRUCTION.

GENERAL SITE LAYOUT NOTES

1. THE CONTRACTOR SHALL BE RESPONSIBLE FOR PROVIDING ALL SITE LAYOUT. THE CONTRACTOR SHALL MAKE TIES TO ALL UTILITY CONNECTIONS AND PROVIDE AS-BUILT PLANS FOR ALL UTILITIES SHOWING TIES TO CONNECTIONS, BENDS, VALVES, LENGTHS OF LINES, AND INVERTS. AS-BUILT PLANS SHOWING ALL UNDERGROUND UTILITIES INSTALLED OR ENCOUNTERED SHALL BE REVIEWED BY THE ENGINEER. THE CONTRACTOR SHALL PROVIDE ANY CORRECTIONS OR ADDITIONS TO THE SATISFACTION OF THE ENGINEER AND TOWNSHIP BEFORE UTILITIES WILL BE ACCEPTED.

2. THE CONTRACTOR SHALL PROVIDE SMOOTH TRANSITIONS BETWEEN NEW WORK AND EXISTING CONDITIONS.

3. ALL ANGLES ARE 90°, UNLESS OTHERWISE INDICATED.

GENERAL LANDSCAPE PLANTING NOTES

1. ALL NON-ATHLETIC AREAS OF THE SITE WHICH ARE DISTURBED AND NOT PLANTED, MULCHED, PAVED, ETC. SHALL BE TOPSOILED, SEEDED AND MULCHED. APPROVED TOPSOIL TO BE INSTALLED TO A MINIMUM 6" DEPTH.

Drawing Copyright © 2015

CHA
6 Campus Drive
Parsippany, NJ 07054-4406
973.538.2325 - www.chacompanies.com

PETER L. LILHOLT, JR.
PROFESSIONAL ENGINEER N.J. LIC.
24GE04894200

IT IS A VIOLATION OF LAW FOR ANY PERSON, UNLESS THEY ARE ACTING UNDER THE DIRECTION OF A LICENSED PROFESSIONAL ENGINEER, ARCHITECT, LANDSCAPE ARCHITECT OR LAND SURVEYOR TO ALTER AN ITEM IN ANY WAY. IF AN ITEM BEARING THE STAMP OF A LICENSED PROFESSIONAL IS ALTERED, THE ALTERING ENGINEER, ARCHITECT, LANDSCAPE ARCHITECT OR LAND SURVEYOR SHALL STAMP THE DOCUMENT AND INCLUDE THE NOTATION "ALTERED BY" FOLLOWED BY THEIR SIGNATURE, THE DATE OF SUCH ALTERATION, AND A SPECIFIC DESCRIPTION OF THE ALTERATION.

PIONEERS

WILLIAM PATERSON UNIVERSITY

SOCCER FIELD IMPROVEMENTS

300 POMPTON RD.
WAYNE, NJ 07470

No.	Submittal / Revision	App'd.	By	Date
1	CONSTRUCTION DOCUMENTS	DD	TM	01/11/16

GENERAL NOTES

Designed By:	Drawn By:	Checked By:
WM	TM	DD
Issue Date:	Project No:	Scale:
01/11/2016	30059	AS SHOWN

Drawing No.:

C-001

File: V:\PROJECTS\ANY\K4\30059\CADD_ACAD\C001-30059.DWG
Saved: 1/13/2016 12:01:11 PM Plotted: 1/13/2016 1:16:35 PM Current User: Merkelin, Tim LastSavedBy: 3512

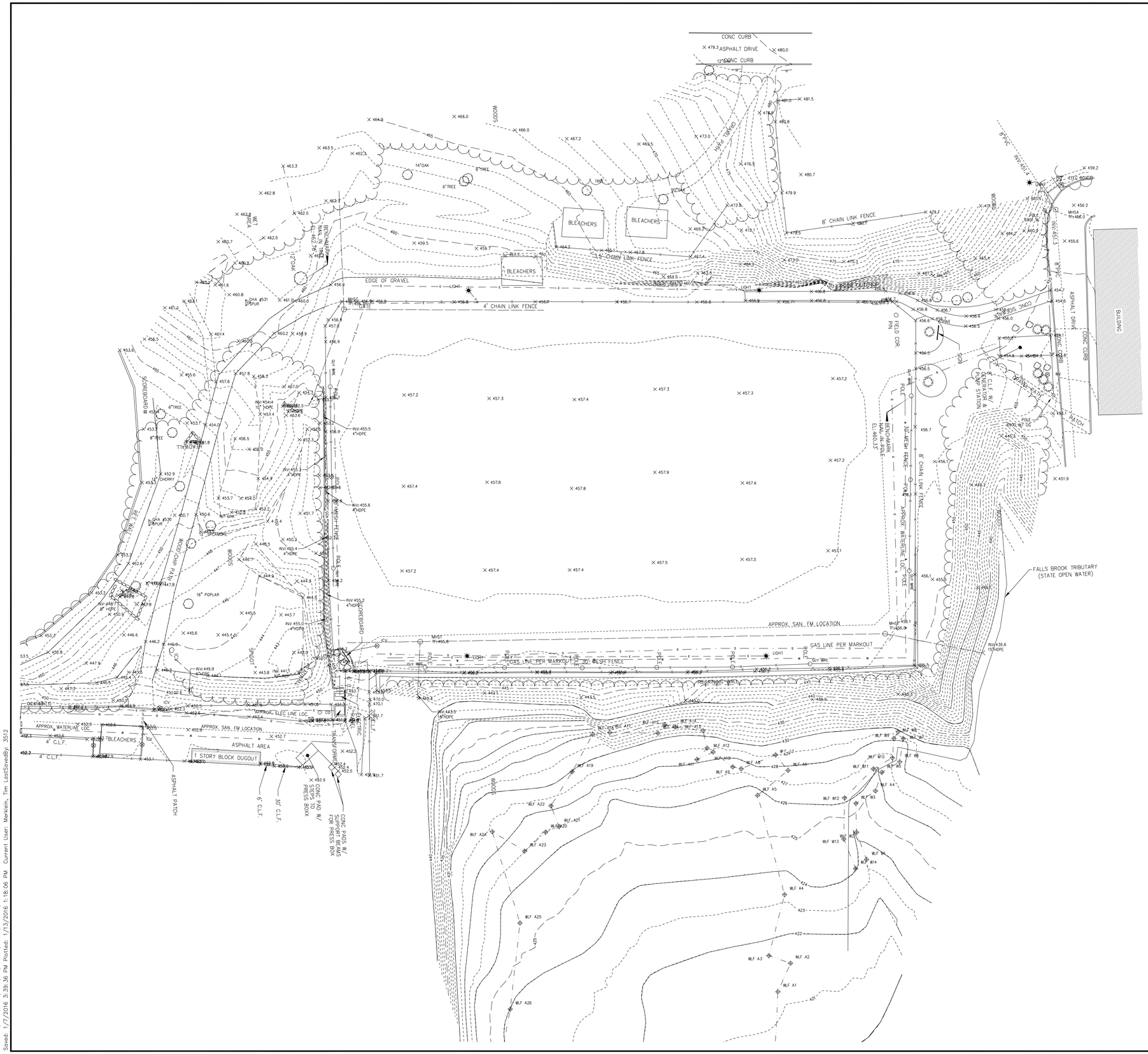

NOTES:

1. BASE MAPPING PREPARED BY CHA FROM A MAY 2015 FIELD SURVEY.
2. NORTH ORIENTATION IS TRUE NORTH BASED ON GPS OBSERVATION TAKEN AT THE TIME OF THE FIELD SURVEY. MAPPING PREPARED ON NAD83 NEW JERSEY STATE PLANE, US FOOT.
3. CONTOURS AND ELEVATIONS ARE SHOWN ON NAVD88 VERTICAL DATUM BASED ON GPS OBSERVATIONS.
4. UNDERGROUND UTILITIES, STRUCTURES AND FACILITIES HAVE BEEN SHOWN FROM SURFACE LOCATIONS COMBINED WITH AVAILABLE RECORD PLANS. THEIR ACTUAL LOCATION MAY VARY SOMEWHAT FROM WHAT IS SHOWN AND OTHERS MAY EXIST. SIZE, TYPE AND LOCATION OF ALL UTILITIES AND STRUCTURES MUST BE VERIFIED BY PROPER AUTHORITIES PRIOR TO ANY AND ALL CONSTRUCTION. CALL DIG SAFE PRIOR TO ANY EXCAVATION.
5. WETLAND DELINEATION COMPETED BY CHA ON 5-27-15.

Drawing Copyright © 2015

CHA
6 Campus Drive
Parsippany, NJ 07054-4406
973.538.2125 - www.chacompanies.com

PETER L. LILHOLT, JR.
PROFESSIONAL ENGINEER N.J. LIC.
24GE04894200

IT IS A VIOLATION OF LAW FOR ANY PERSON, UNLESS THEY ARE ACTING UNDER THE DIRECTION OF A LICENSED PROFESSIONAL ENGINEER, ARCHITECT, LANDSCAPE ARCHITECT OR LAND SURVEYOR TO ALTER AN ITEM IN ANY WAY. IF AN ITEM BEARING THE STAMP OF A LICENSED PROFESSIONAL IS ALTERED, THE ALTERING ENGINEER, ARCHITECT, LANDSCAPE ARCHITECT OR LAND SURVEYOR SHALL STAMP THE DOCUMENT AND INCLUDE THE NOTATION "ALTERED BY" FOLLOWED BY THEIR SIGNATURE, THE DATE OF SUCH ALTERATION, AND A SPECIFIC DESCRIPTION OF THE ALTERATION.

PIONEERS

WILLIAM PATERSON UNIVERSITY

SOCCER FIELD IMPROVEMENTS

300 POMPTON RD.
WAYNE, NJ 07470

No.	Submittal / Revision	App'd.	By	Date
1	CONSTRUCTION DOCUMENTS	DD	TM	01/11/16

EXISTING CONDITIONS PLAN

Designed By:	Drawn By:	Checked By:
WM	TM	DD
Issue Date:	Project No:	Scale:
01/11/2016	30059	AS SHOWN

Drawing No.:

C-002

File: V:\PROJECTS\ANYYX4\30059\CADD_ACAD\C002-30059.DWG
Saved: 1/7/2016 3:39:36 PM Plotted: 1/13/2016 1:18:06 PM Current User: Merklein, Tim LastSavedBy: 3512

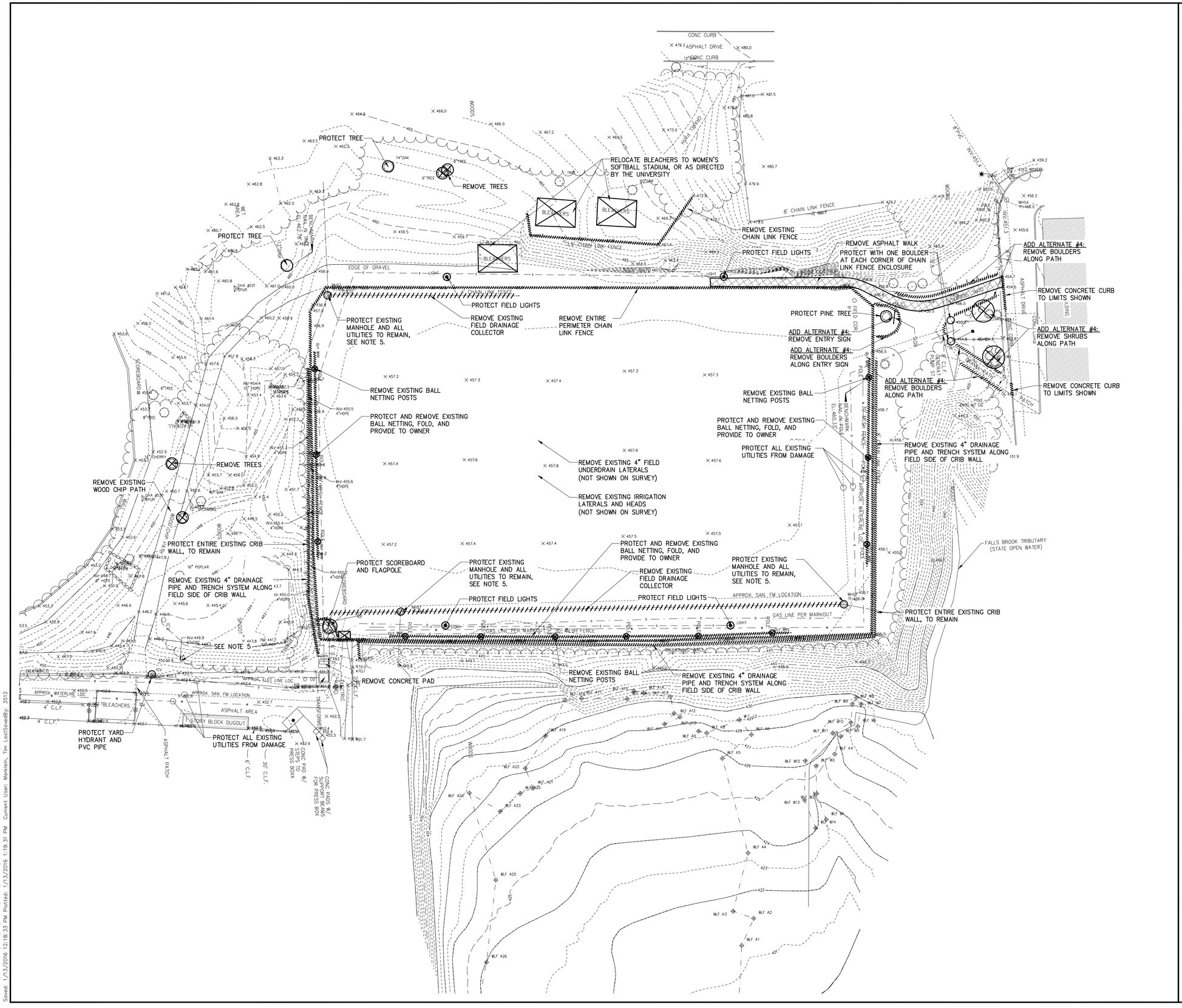

LEGEND

- AREA REMOVAL
- SITE ITEM REMOVAL
- ITEM TO BE PROTECTED
- LINE ITEM STRUCTURAL DEMOLITION

NOTES:

1. ALL ORGANIC CONSTRUCTION DEBRIS SHALL BE DISPOSED OF OFF-SITE IN A LEGAL MANNER, AT THE CONTRACTOR'S EXPENSE
2. THE CONTRACTOR SHALL EXERCISE CARE DURING REMOVAL OPERATIONS. ANY ITEMS INDICATED TO REMAIN THAT ARE DAMAGED DURING REMOVAL OPERATIONS SHALL BE REPAIRED OR REPLACED, IN KIND, BY THE CONTRACTOR, AT NO COST TO THE OWNER.
3. CONTRACTOR TO REMOVE EXISTING SOD FROM THE SITE. TOPSOIL MAY BE USED ON-SITE AT THE DISTURBED AREAS SCHEDULED TO RECEIVE SOD OR SEED.
3. NO EXCESS TOPSOIL SHALL BE REMOVED FROM THE SITE. EXCESS MATERIAL MAY BE DISPOSED OF AT TOWER SITE LOCATED ON CAMPUS APPROXIMATELY 1/4 MILE FROM PROJECT SITE (SEE G-000 PROJECT LOCATION MAP). CONTRACTOR SHALL BE RESPONSIBLE FOR EROSION & SEDIMENT CONTROL OF STOCKPILE, GRADING OF STOCKPILE TO PROVIDE SUITABLE SLOPE FOR MOWING, AND SEEDING.
4. ALL SITE CLEARING SHALL BE PERFORMED BY THE CONTRACTOR TO THE LIMITS OF DISTURBANCE, SEE SE-101.
5. SEE UTILITY PLAN FOR ADDITIONAL UTILITY ADJUSTMENT REQUIREMENTS

0 30' 60'
Scale in feet

Drawing Copyright © 2015

CHA
6 Campus Drive
Parsippany, NJ 07054-4406
973.539.2125 - www.chacompanies.com

PETER L. LILHOLT, JR.
PROFESSIONAL ENGINEER N.J. LIC.
24GE04894200

IT IS A VIOLATION OF LAW FOR ANY PERSON, UNLESS THEY ARE ACTING UNDER THE DIRECTION OF A LICENSED PROFESSIONAL ENGINEER, ARCHITECT, LANDSCAPE ARCHITECT OR LAND SURVEYOR TO ALTER AN ITEM IN ANY WAY. IF AN ITEM BEARING THE STAMP OF A LICENSED PROFESSIONAL IS ALTERED, THE ALTERING ENGINEER, ARCHITECT, LANDSCAPE ARCHITECT OR LAND SURVEYOR SHALL STAMP THE DOCUMENT AND INCLUDE THE NOTATION "ALTERED BY" FOLLOWED BY THEIR SIGNATURE, THE DATE OF SUCH ALTERATION, AND A SPECIFIC DESCRIPTION OF THE ALTERATION.

PIONEERS

WILLIAM PATERSON UNIVERSITY

SOCCER FIELD IMPROVEMENTS

300 POMPTON RD.
WAYNE, NJ 07470

No.	Submittal / Revision	App'd.	By	Date
1	CONSTRUCTION DOCUMENTS	DD	TM	01/11/16

DEMOLITION PLAN

Designed By:	Drawn By:	Checked By:
WM	TM	DD
Issue Date: 01/11/2016	Project No: 30059	Scale: AS SHOWN

Drawing No.:

C-003

File: V:\PROJECTS\ANY\K4\30059\CADD_ACAD\C003-30059.DWG
Saved: 1/13/2016 12:16:33 PM Plotted: 1/13/2016 1:19:31 PM Current User: Merklein, Tim LastSavedBy: 3512

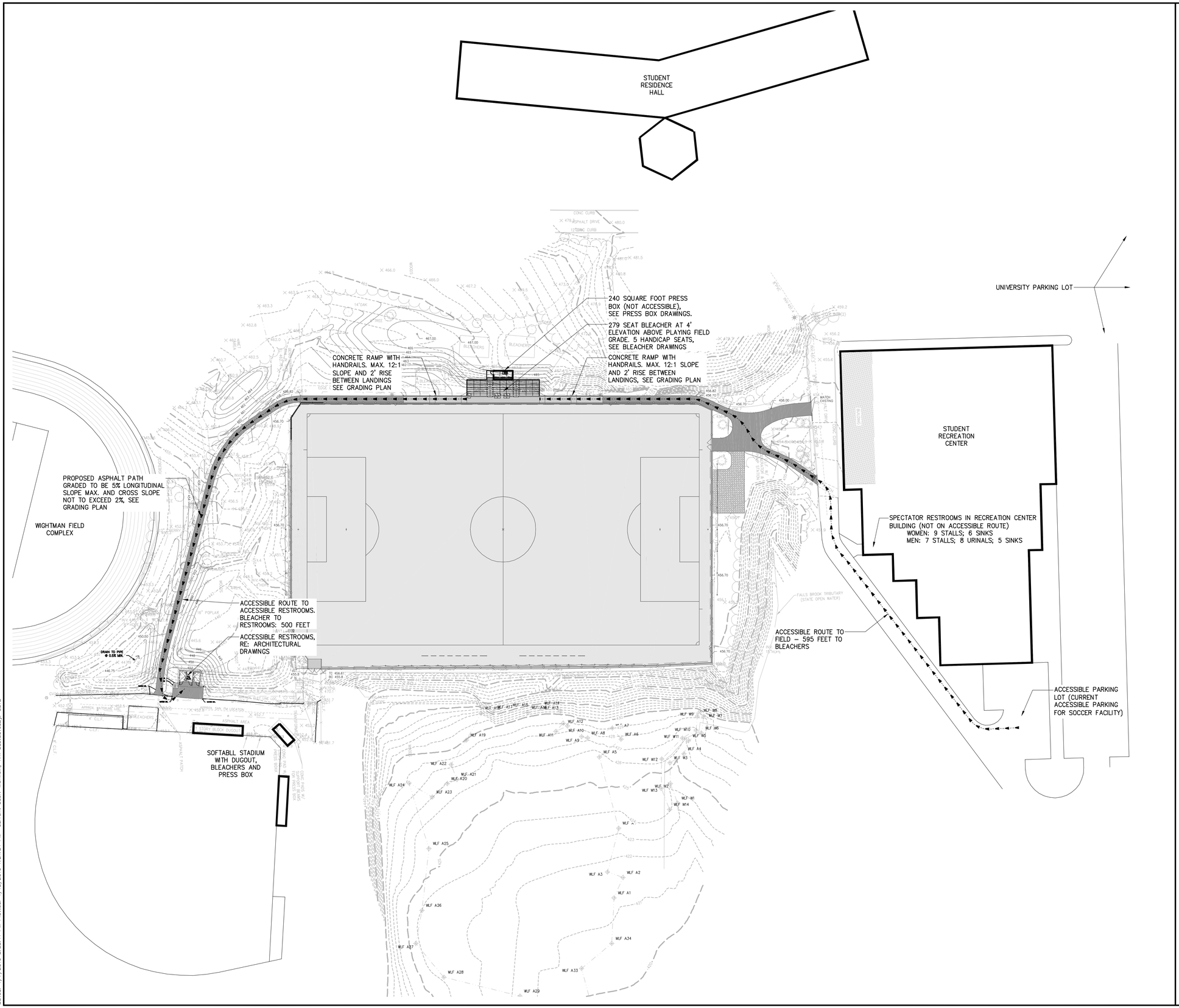

LEGEND

ACCESSIBLE ROUTE

File: V:\PROJECTS\ANY\K4\30059\CADD_ACAD\C004-30059.DWG
Saved: 1/7/2016 3:35:11 PM Plotted: 1/13/2016 1:21:34 PM Current User: Merklein, Tim LastSavedBy: 3512

Drawing Copyright © 2015

CHA
6 Campus Drive
Parsippany, NJ 07054-4406
973.538.2125 - www.chacompanies.com

PETER L. LILHOLT, JR.
PROFESSIONAL ENGINEER N.J. LIC.
24GE04894200

IT IS A VIOLATION OF LAW FOR ANY PERSON, UNLESS THEY ARE ACTING UNDER THE DIRECTION OF A LICENSED PROFESSIONAL ENGINEER, ARCHITECT, LANDSCAPE ARCHITECT OR LAND SURVEYOR TO ALTER AN ITEM IN ANY WAY. IF AN ITEM BEARING THE STAMP OF A LICENSED PROFESSIONAL IS ALTERED, THE ALTERING ENGINEER, ARCHITECT, LANDSCAPE ARCHITECT OR LAND SURVEYOR SHALL STAMP THE DOCUMENT AND INCLUDE THE NOTATION "ALTERED BY" FOLLOWED BY THEIR SIGNATURE, THE DATE OF SUCH ALTERATION, AND A SPECIFIC DESCRIPTION OF THE ALTERATION.

PIONEERS

WILLIAM PATERSON UNIVERSITY

SOCCER FIELD IMPROVEMENTS

300 POMPTON RD.
WAYNE, NJ 07470

No.	Submittal / Revision	App'd.	By	Date
1	CONSTRUCTION DOCUMENTS	DD	TM	01/11/16

ACCESSIBILITY PLAN

Designed By:	Drawn By:	Checked By:
WM	TM	DD
Issue Date:	Project No:	Scale:
01/11/2016	30059	AS SHOWN

Drawing No.:

C-004

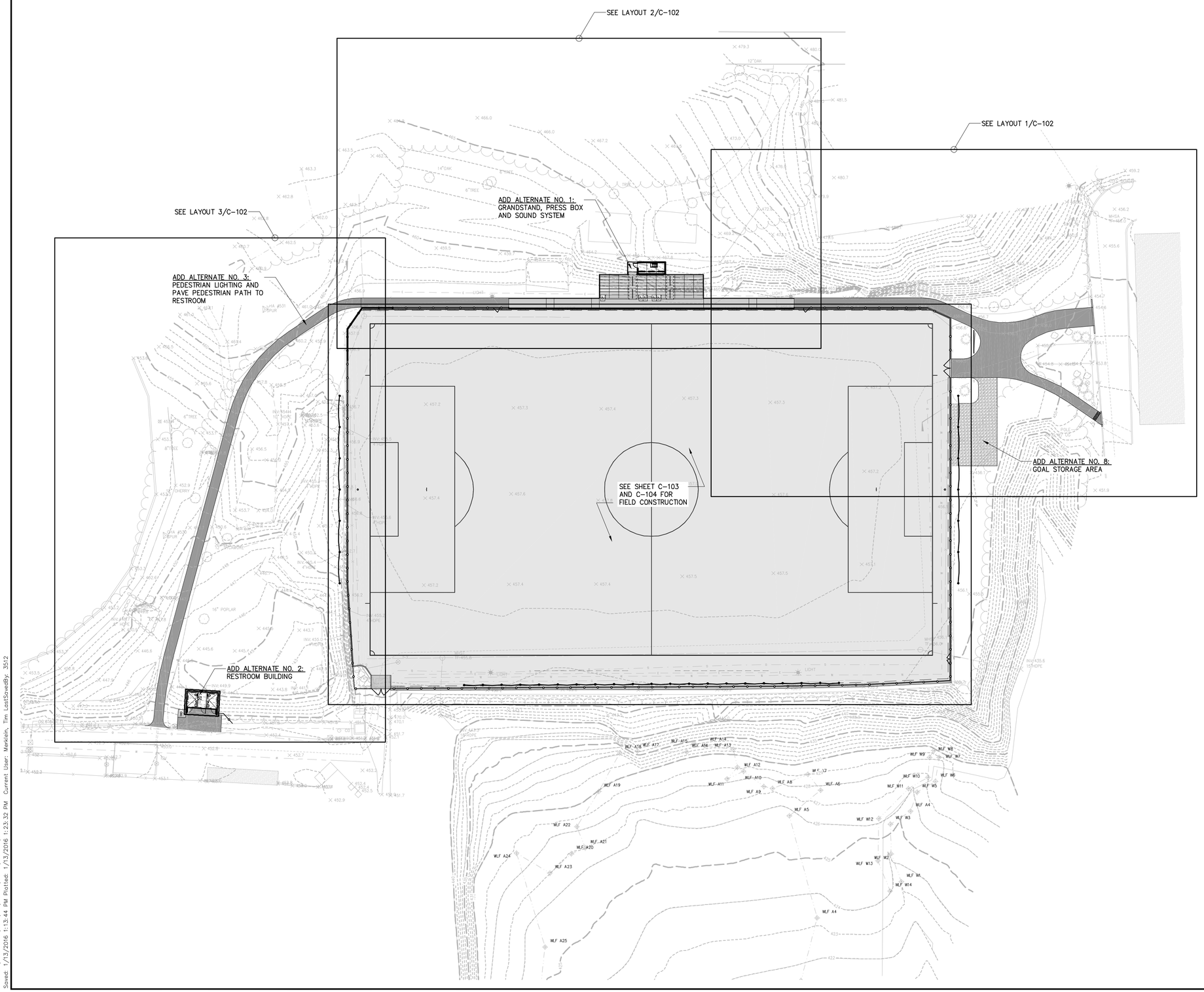

LEGEND

- SYNTHETIC TURF
- CONCRETE
- ASPHALT
- CHAIN LINK FENCE

NOTES:

1. VERIFY ALL SITE CONDITIONS AND DIMENSIONS SHOWN ON THE PLANS PRIOR TO COMMENCEMENT OF WORK. NOTIFY OWNER AND ITS REPRESENTATIVES OF ANY DISCREPANCIES OR IRREGULAR CONDITIONS.
2. CONTRACTOR TO SUBMIT SHOP DRAWING SHOWING ALL ELEMENTS PER SPECIFICATIONS.
3. REFERENCE SHEET C-402 FOR LOCATION OF QUICK COUPLERS, CONDUITS, & VAULT BOXES, ADJACENT TO OR WITHIN FIELD AREA.
4. THE CONTRACTOR SHALL BE RESPONSIBLE FOR PROVIDING ALL FIELD LAYOUT. THE CONTRACTOR SHALL TAKE TIES TO ALL UTILITY CONNECTIONS AND PROVIDE MARKED-UP RECORD PLANS FOR ALL UTILITIES INSTALLED OR ENCOUNTERED PER SPECIFICATIONS.
5. THE CONTRACTOR SHALL PROVIDE SMOOTH TRANSITIONS BETWEEN NEW WORK AND EXISTING CONDITIONS.

0 30' 60'
Scale in feet

Drawing Copyright © 2015

CHA
6 Campus Drive
Parsippany, NJ 07054-4406
973.538.3125 - www.chacompanies.com

PETER L. LILHOLT, JR.
PROFESSIONAL ENGINEER N.J. LIC.
24GE04894200

IT IS A VIOLATION OF LAW FOR ANY PERSON, UNLESS THEY ARE ACTING UNDER THE DIRECTION OF A LICENSED PROFESSIONAL ENGINEER, ARCHITECT, LANDSCAPE ARCHITECT OR LAND SURVEYOR TO ALTER AN ITEM IN ANY WAY. IF AN ITEM BEARING THE STAMP OF A LICENSED PROFESSIONAL IS ALTERED, THE ALTERING ENGINEER, ARCHITECT, LANDSCAPE ARCHITECT OR LAND SURVEYOR SHALL STAMP THE DOCUMENT AND INCLUDE THE NOTATION "ALTERED BY" FOLLOWED BY THEIR SIGNATURE, THE DATE OF SUCH ALTERATION, AND A SPECIFIC DESCRIPTION OF THE ALTERATION.

PIONEERS

WILLIAM PATERSON UNIVERSITY

SOCCER FIELD IMPROVEMENTS

300 POMPTON RD.
WAYNE, NJ 07470

No.	Submittal / Revision	Appd.	By	Date
1	CONSTRUCTION DOCUMENTS	DD	TM	01/11/16

OVERALL SITE LAYOUT PLAN

Designed By:	Drawn By:	Checked By:
WM	TM	DD
Issue Date:	Project No:	Scale:
01/11/2016	30059	AS SHOWN

Drawing No.:
C-101

File: V:\PROJECTS\ANYX4\30059\CADD_ACAD\C101-103-30059.DWG
Saved: 1/13/2016 1:13:44 PM Plotted: 1/13/2016 1:23:32 PM Current User: Merklein, Tim LastSavedBy: 3512

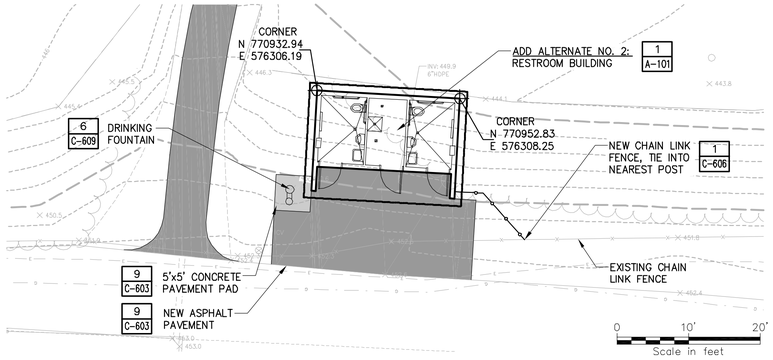

4 ENLARGED RESTROOM BUILDING

PLAN SCALE: 1" = 10'-0"

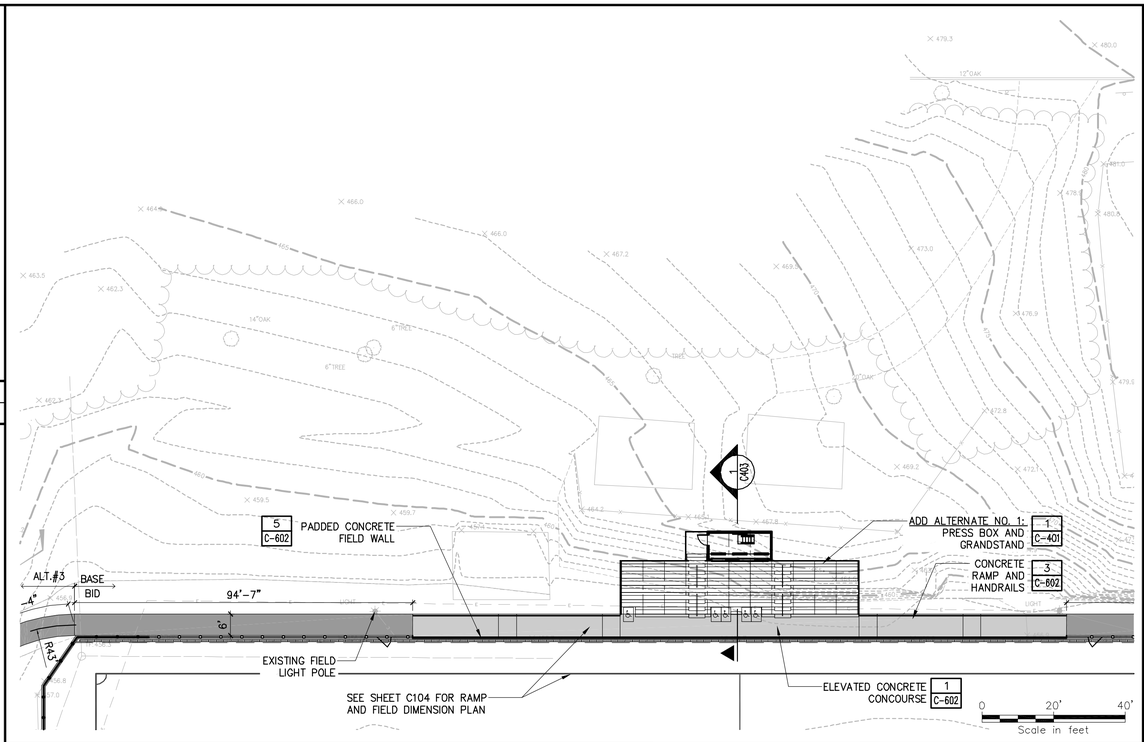

2 GRANDSTAND, RAMP AND WEST PATH

PLAN SCALE: 1" = 20'-0"

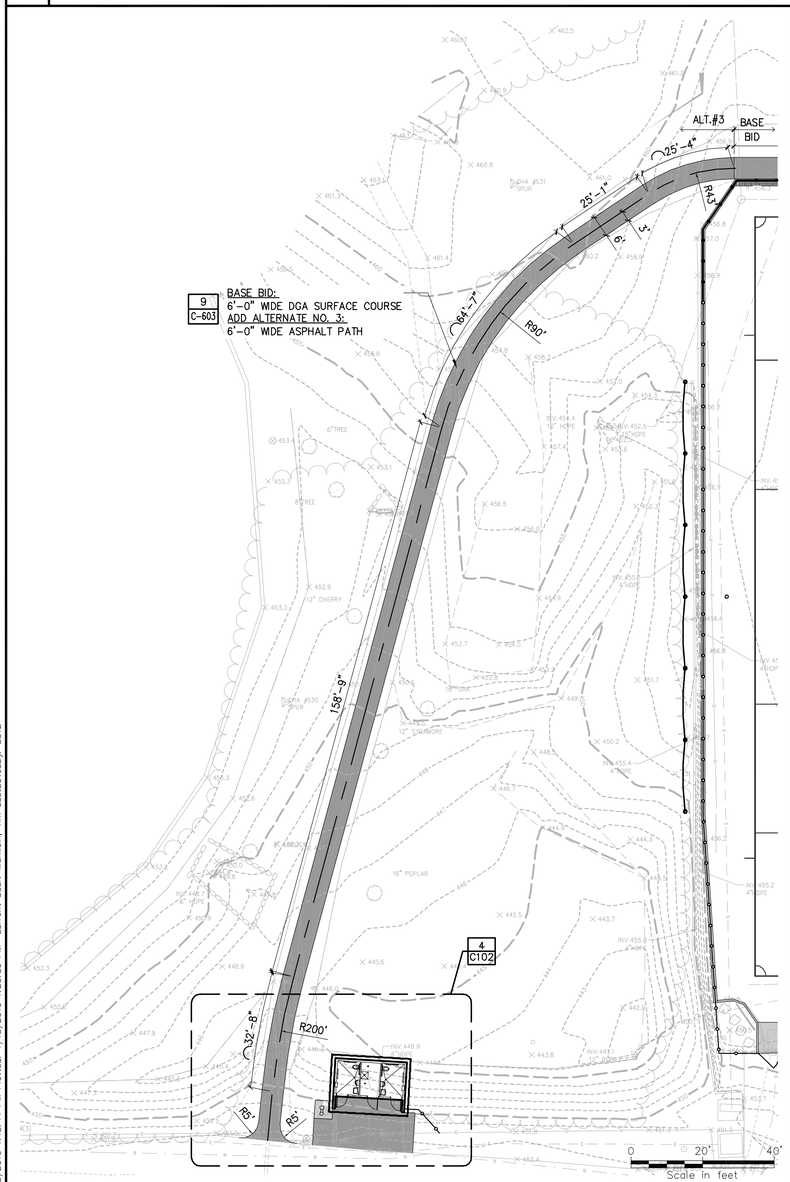

3 SOUTH PATH AND RESTROOM BUILDING

PLAN SCALE: 1" = 10'-0"

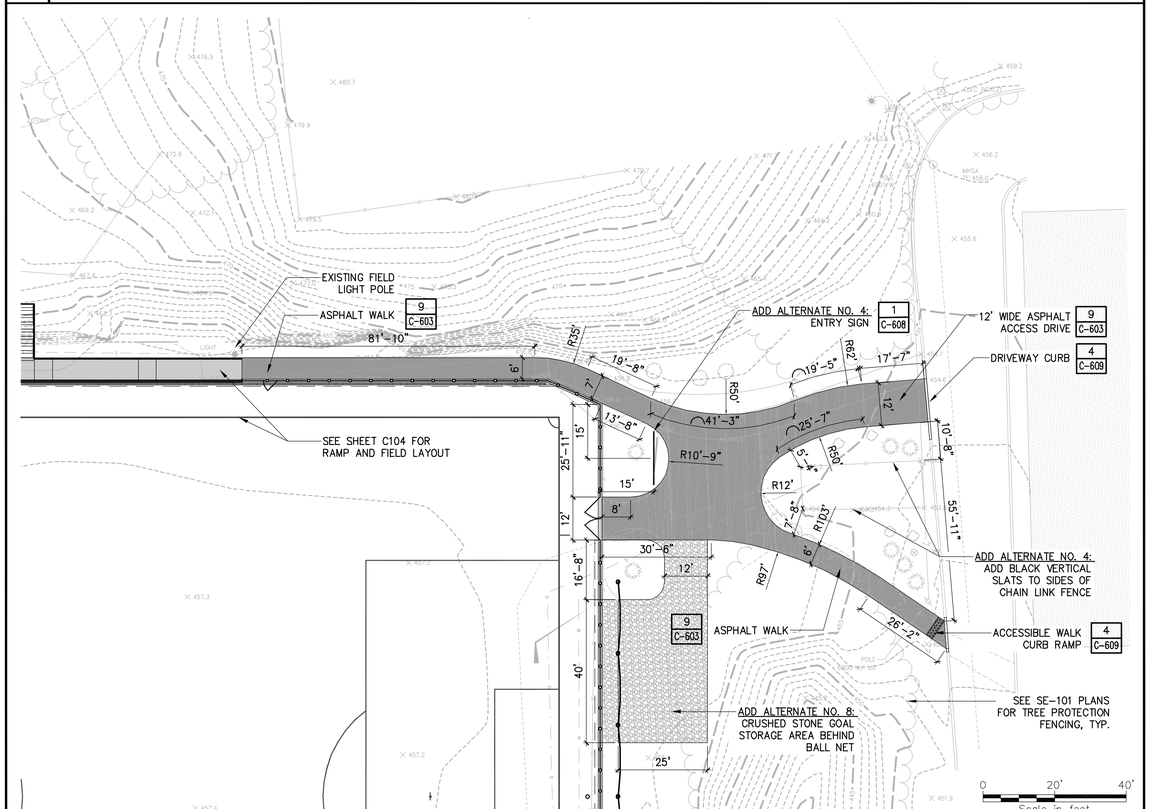

1 NORTH SIDEWALK AND ACCESS DRIVE

PLAN SCALE: 1" = 20'-0"

LEGEND

CONCRETE

ASPHALT

CHAIN LINK FENCE

NOTES:

1. SEE SHEET C-101 FOR GENERAL SITE LAYOUT NOTES.

Drawing Copyright © 2015

CHA
6 Campus Drive
Parsippany, NJ 07054-4406
973.538.2325 - www.chacompanies.com

PETER L. LILHOLT, JR.
PROFESSIONAL ENGINEER N.J. LIC.
24GE04894200

IT IS A VIOLATION OF LAW FOR ANY PERSON, UNLESS THEY ARE ACTING UNDER THE DIRECTION OF A LICENSED PROFESSIONAL ENGINEER, ARCHITECT, LANDSCAPE ARCHITECT OR LAND SURVEYOR TO ALTER AN ITEM IN ANY WAY. IF AN ITEM BEARING THE STAMP OF A LICENSED PROFESSIONAL IS ALTERED, THE ALTERING LICENSEE SHALL ATTACH TO THE ITEM THE ALTERING LICENSEE'S SEAL. THE SURVEYOR SHALL STAMP THE DOCUMENT AND INCLUDE THE NOTATION "ALTERED BY" FOLLOWED BY THEIR SIGNATURE, THE DATE OF SUCH ALTERATION, AND A SPECIFIC DESCRIPTION OF THE ALTERATION.

PIONEERS

WILLIAM PATERSON UNIVERSITY

SOCCER FIELD IMPROVEMENTS

300 POMPTON RD.
WAYNE, NJ 07470

No.	Submittal / Revision	App'd.	By	Date
1	CONSTRUCTION DOCUMENTS	DD	TM	01/11/16

SITE LAYOUT PLAN

Designed By:	Drawn By:	Checked By:
WM	TM	DD
Issue Date: 01/11/2016	Project No: 30059	Scale: AS SHOWN

Drawing No.:

C-102

File: V:\PROJECTS\ANY\K4\30059\CADD_ACAD\C101-103-30059.DWG
Saved: 1/13/2016 1:13:44 PM Plotted: 1/13/2016 1:23:59 PM Current User: Merkelin, Tim LastSavedBy: 3512

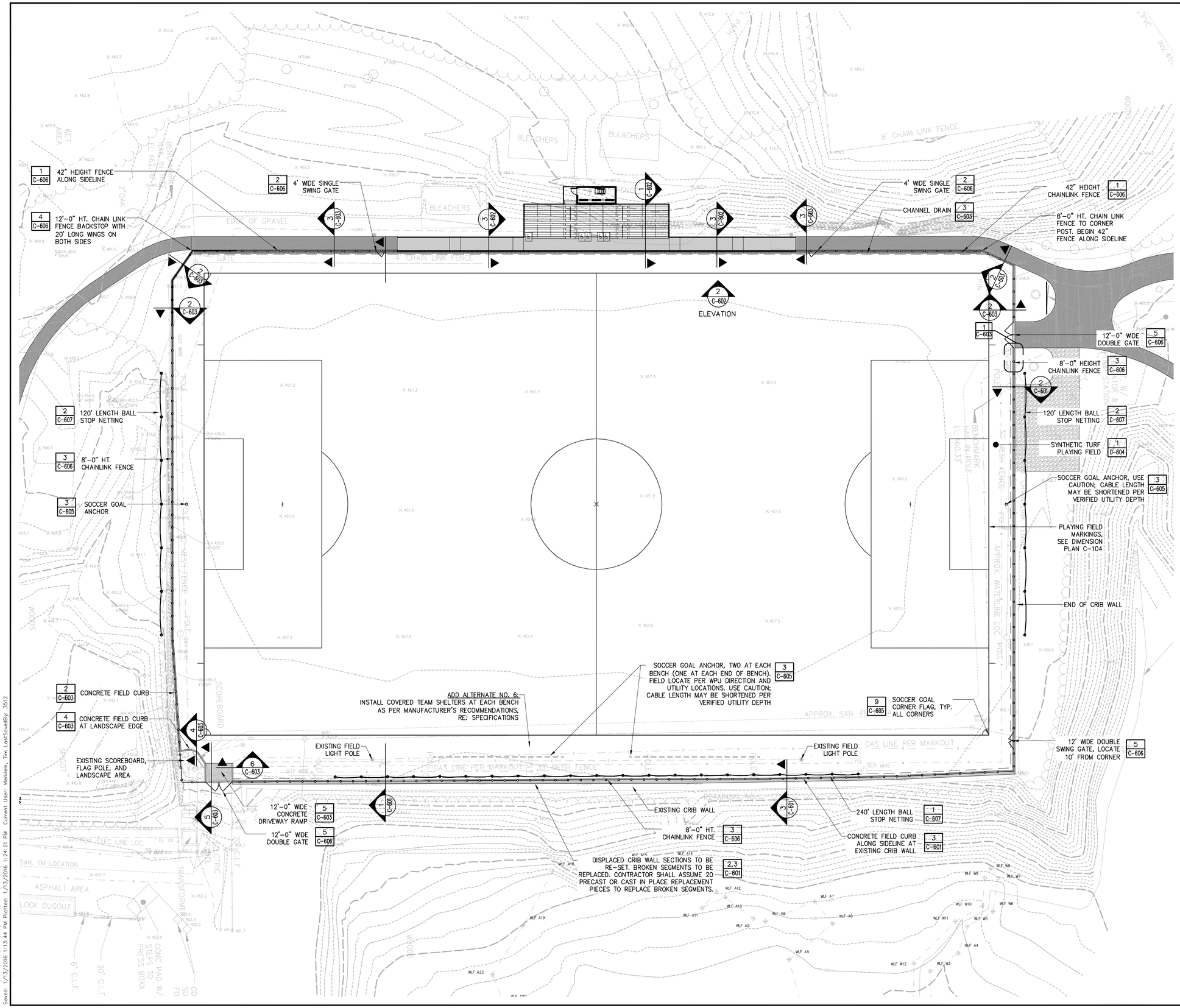

LEGEND

CONCRETE

ASPHALT

CHAIN LINK FENCE

NOTES:

1. SEE SHEET C-101 FOR GENERAL SITE LAYOUT NOTES.
2. SEE SHEET C-104 FOR FIELD DIMENSION PLAN, FIELD STRIPING LAYOUT, AND LIMITS OF SYNTHETIC TURF

Drawing Copyright © 2015

CHA
6 Campus Drive
Parsippany, NJ 07054-4406
973.538.3125 - www.chacompanies.com

PETER L. LILHOLT, JR.
PROFESSIONAL ENGINEER N.J. LIC.
24GE04894200

IT IS A VIOLATION OF LAW FOR ANY PERSON, UNLESS THEY ARE ACTING UNDER THE DIRECTION OF A LICENSED PROFESSIONAL ENGINEER, ARCHITECT, LANDSCAPE ARCHITECT OR LAND SURVEYOR TO ALTER AN ITEM IN ANY WAY. IF AN ITEM BEARING THE STAMP OF A LICENSED PROFESSIONAL IS ALTERED, THE ALTERING ENGINEER, ARCHITECT, LANDSCAPE ARCHITECT OR LAND SURVEYOR SHALL STAMP THE DOCUMENT AND INCLUDE THE NOTATION "ALTERED BY" FOLLOWED BY THEIR SIGNATURE, THE DATE OF SUCH ALTERATION, AND A SPECIFIC DESCRIPTION OF THE ALTERATION.

PIONEERS

WILLIAM PATERSON UNIVERSITY

SOCCER FIELD IMPROVEMENTS

300 POMPTON RD.
WAYNE, NJ 07470

No.	Submittal / Revision	App'd.	By	Date
1	CONSTRUCTION DOCUMENTS	DD	TM	01/11/16

FIELD LAYOUT PLAN

Designed By:	Drawn By:	Checked By:
WM	TM	DD
Issue Date: 01/11/2016	Project No: 30059	Scale: AS SHOWN

Drawing No.:

C-103

File: V:\PROJECTS\ANY\K4\30059\CADD_ACAD\C101-103-30059.DWG
Saved: 1/13/2016 6:13:44 PM Plotted: 1/13/2016 1:24:21 PM Current User: Merkelin, Tim LastSavedBy: 3512

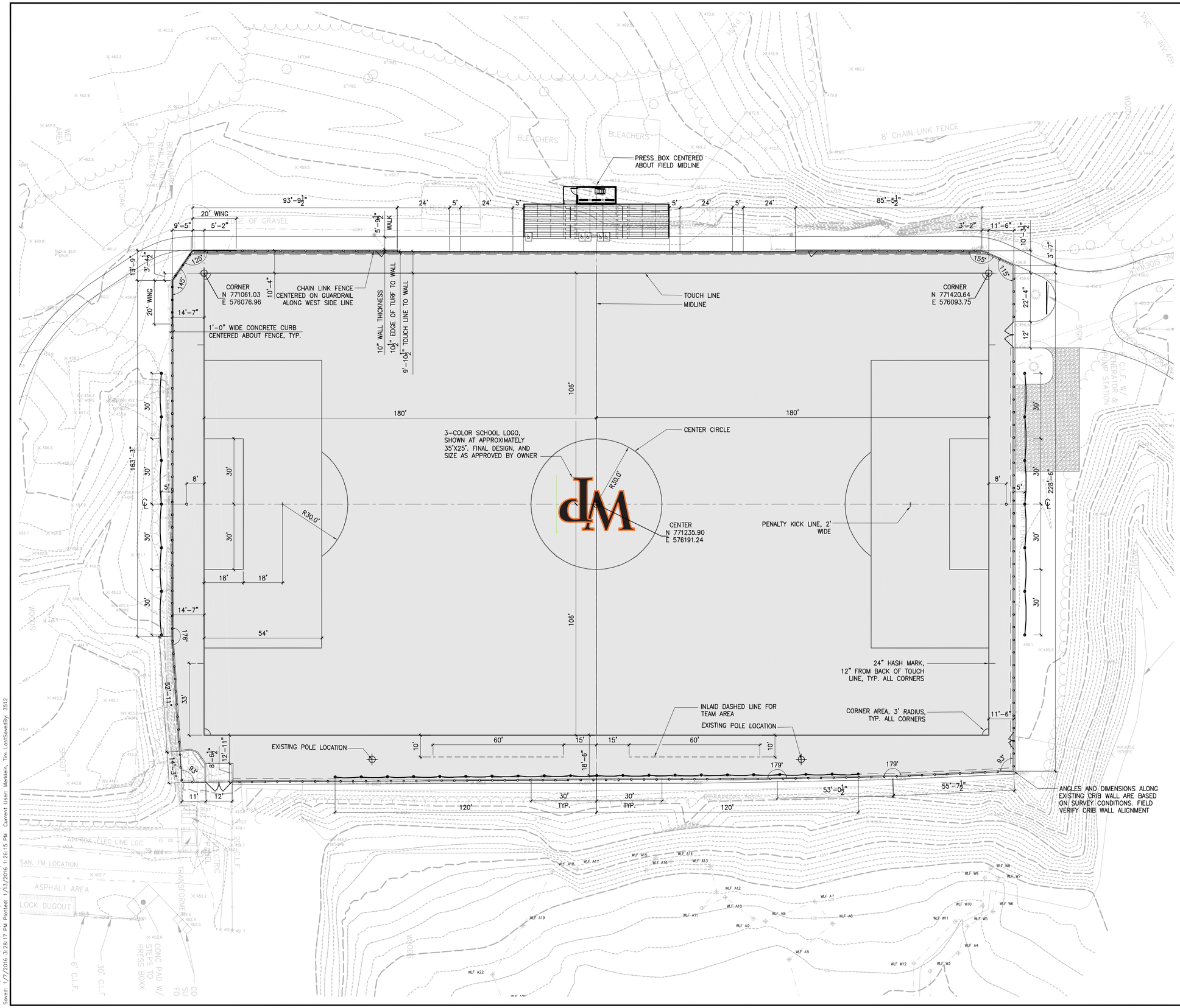

LEGEND

SYNTHETIC TURF

NOTES:

1. ALL ANGLES ARE 90° UNLESS OTHERWISE INDICATED.
2. ALL LINES SHALL BE 4" WIDE UNLESS OTHERWISE INDICATED.
3. ALL MARKINGS SHALL CONFORM WITH THE LATEST EDITION OF NCAA RULES.
4. LINES SHALL BE WHITE, AND TUFTED OR INLAID PER SPECIFICATIONS.
5. TOUCH LINE AND GOAL LINE FIELD DIMENSIONS ARE TO THE OUTSIDE EDGE OF THE 4" LINES.
6. SOCCER PLAYING FIELD LINES ARE SYMMETRICAL ABOUT FIELD CENTERLINE AND MIDLINE.

0 20' 40'
Scale in feet

Drawing Copyright © 2015

CHA
6 Campus Drive
Parsippany, NJ 07054-4406
973.539.2125 - www.chacompanies.com

PETER L. LILHOLT, JR.
PROFESSIONAL ENGINEER N.J. LIC.
24GE04894200

IT IS A VIOLATION OF LAW FOR ANY PERSON, UNLESS THEY ARE ACTING UNDER THE DIRECTION OF A LICENSED PROFESSIONAL ENGINEER, ARCHITECT, LANDSCAPE ARCHITECT OR LAND SURVEYOR TO ALTER AN ITEM IN ANY WAY. IF AN ITEM BEARING THE STAMP OF A LICENSED PROFESSIONAL IS ALTERED, THE ALTERING ENGINEER, ARCHITECT, LANDSCAPE ARCHITECT OR LAND SURVEYOR SHALL STAMP THE DOCUMENT AND INCLUDE THE NOTATION "ALTERED BY" FOLLOWED BY THEIR SIGNATURE, THE DATE OF SUCH ALTERATION, AND A SPECIFIC DESCRIPTION OF THE ALTERATION.

PIONEERS

WILLIAM PATERSON UNIVERSITY

SOCCER FIELD IMPROVEMENTS

300 POMPTON RD.
WAYNE, NJ 07470

No.	Submittal / Revision	App'd.	By	Date
1	CONSTRUCTION DOCUMENTS	DD	TM	01/11/16

FIELD DIMENSION PLAN

Designed By:	Drawn By:	Checked By:
WM	TM	DD
Issue Date: 01/11/2016	Project No: 30059	Scale: AS SHOWN

Drawing No.:
C-104

File: V:\PROJECTS\ANY\X4\30059\CADD_ACAD\C104-30059.DWG
Saved: 1/7/2016 3:28:17 PM Plotted: 1/13/2016 1:28:15 PM Current User: Merklein, Tim LastSavedBy: 3512

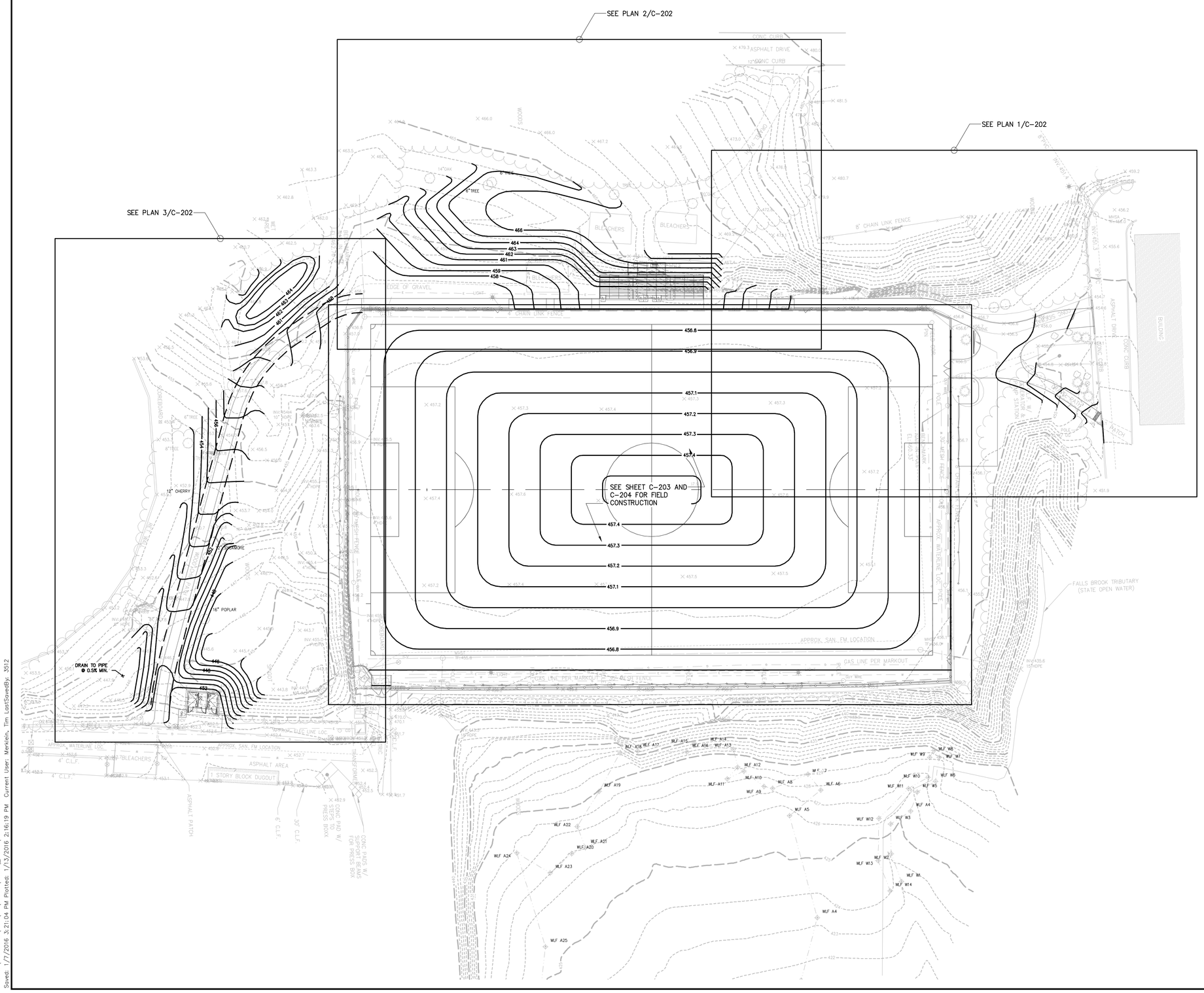

LEGEND

—— ——	LIMITS OF WORK
—— 218 ——	CONTOUR LINE
26.90-G ——×	SPOT ELEVATION
←	SHEET FLOW DIRECTION

NOTES:

1. FINISH GRADES TO MIRROR THAT OF THE FINISH SUBGRADE.

2. FINISH GRADES TO BE 0.75% CROSS SLOPE ON THE FIELD AND 0.5% LONGITUDINAL SLOPE.

3. THE CONTOUR INTERVAL ON PLAYING FIELD IS SHOWN AT 0.1 FOOT.

4. PROPOSED GRADES SHALL BLEND SMOOTHLY WITH ADJACENT PROPOSED ELEVATIONS.

5. THE CONTRACTOR SHALL BE RESPONSIBLE FOR DEWATERING AND THE MAINTENANCE OF SURFACE DRAINAGE DURING THE COURSE OF WORK.

6. GRADE FIELD TO A SMOOTH, EVEN PLAYING SURFACE TO THE SPOT ELEVATIONS AND CONTOURS SHOWN USING LASER OPERATED EQUIPMENT.

7. FINISH GRADES AND SPOT ELEVATIONS REPRESENT ELEVATIONS AFTER FIELD IS COMPLETED PER SPECIFICATIONS.

8. THE CONTRACTOR SHALL STAKE OUT ALL GRADES IN THE FIELD PRIOR TO CONSTRUCTION AND NOTIFY THE ENGINEER IN WRITING OF ANY DISCREPANCIES. THE ENGINEER SHALL APPROVE STAKED GRADES.

9. FINISH GRADES ARE SYMMETRICAL ABOUT THE FIELD CENTERLINE UNLESS OTHERWISE NOTED.

10. PROTECT EXISTING UTILITIES, DRAINAGE STRUCTURES, AND FENCES FROM DAMAGE DURING GRADING.

11. CENTERLINE OF FIELD FINAL GRADE SHOULD NOT BE A PRONOUNCED "PEAK" PRIOR TO GRASS INSTALLATION. CONTRACTOR TO "ROUND-OFF" FINISHED GRADE AT CENTERLINE IMMEDIATELY PRIOR TO GRASS INSTALLATION. RE: 1/C-601

10. PRIOR TO THE START OF CONSTRUCTION, THE CONTRACTOR IS TO COORDINATE THE PROTECTION OF DRAINAGE STRUCTURES AND DRAINAGE WAYS WITHIN THE PLAYING FIELD PROJECT AREA. RE: EROSION CONTROL PLAN FOR THE ENTIRE WORK SITE.

11. EXCESS MATERIAL FROM TRENCHES AND GENERAL EXCAVATION SHALL BE COORDINATED FOR PLACEMENT ON PROJECT SITE. EXCESS MATERIAL MAY BE DISPOSED OF AT TOWER SITE LOCATED ON CAMPUS APPROXIMATELY 1/4 MILE FROM PROJECT SITE.

12. ALL DISTURBED NON-PLAYING FIELD AREAS SHALL BE SEEDED. RE: SPECIFICATIONS

0 30' 60'
Scale in feet

Drawing Copyright © 2015

CHA
6 Campus Drive
Parsippany, NJ 07054-4406
973.538.3120 • www.chacompanies.com

PETER L. LILHOLT, JR.
PROFESSIONAL ENGINEER N.J. LIC.
24GE04894200

IT IS A VIOLATION OF LAW FOR ANY PERSON, UNLESS THEY ARE ACTING UNDER THE DIRECTION OF A LICENSED PROFESSIONAL ENGINEER, ARCHITECT, LANDSCAPE ARCHITECT OF LAND SURVEYOR TO ALTER AN ITEM IN ANY WAY. IF AN ITEM BEARING THE STAMP OF A LICENSED PROFESSIONAL IS ALTERED, THE ALTERING ENGINEER, ARCHITECT, LANDSCAPE ARCHITECT OF LAND SURVEYOR SHALL STAMP THE DOCUMENT AND INCLUDE THE NOTATION "ALTERED BY" FOLLOWED BY THEIR SIGNATURE, THE DATE OF SUCH ALTERATION, AND A SPECIFIC DESCRIPTION OF THE ALTERATION.

PIONEERS

WILLIAM PATERSON UNIVERSITY

SOCCER FIELD IMPROVEMENTS

300 POMPTON RD.
WAYNE, NJ 07470

No.	Submittal / Revision	App'd.	By	Date
1	CONSTRUCTION DOCUMENTS	DD	TM	01/11/16

OVERALL GRADING PLAN

Designed By:	Drawn By:	Checked By:
DD	TM	DD
Issue Date: 01/11/2016	Project No: 30059	Scale: AS SHOWN

Drawing No.:
C-201

File: V:\PROJECTS\ANY\K4\30059\C400_ACAD\C201-203-30059.DWG
Saved: 1/7/2016 3:21:04 PM Plotted: 1/13/2016 2:16:19 PM Current User: Merkelin, Tim LastSavedBy: 3512

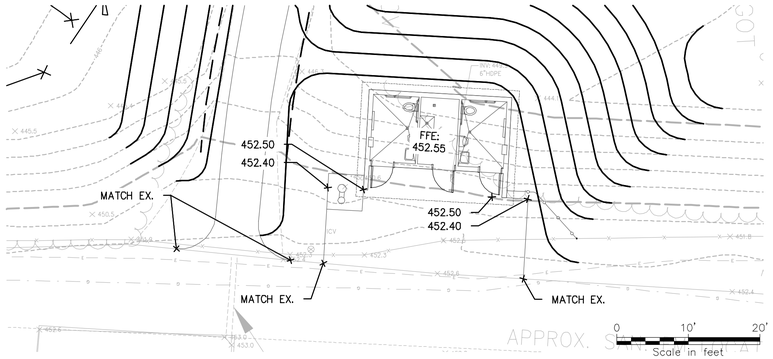

4 ENLARGED RESTROOM BUILDING
PLAN
SCALE: 1" = 10'-0"

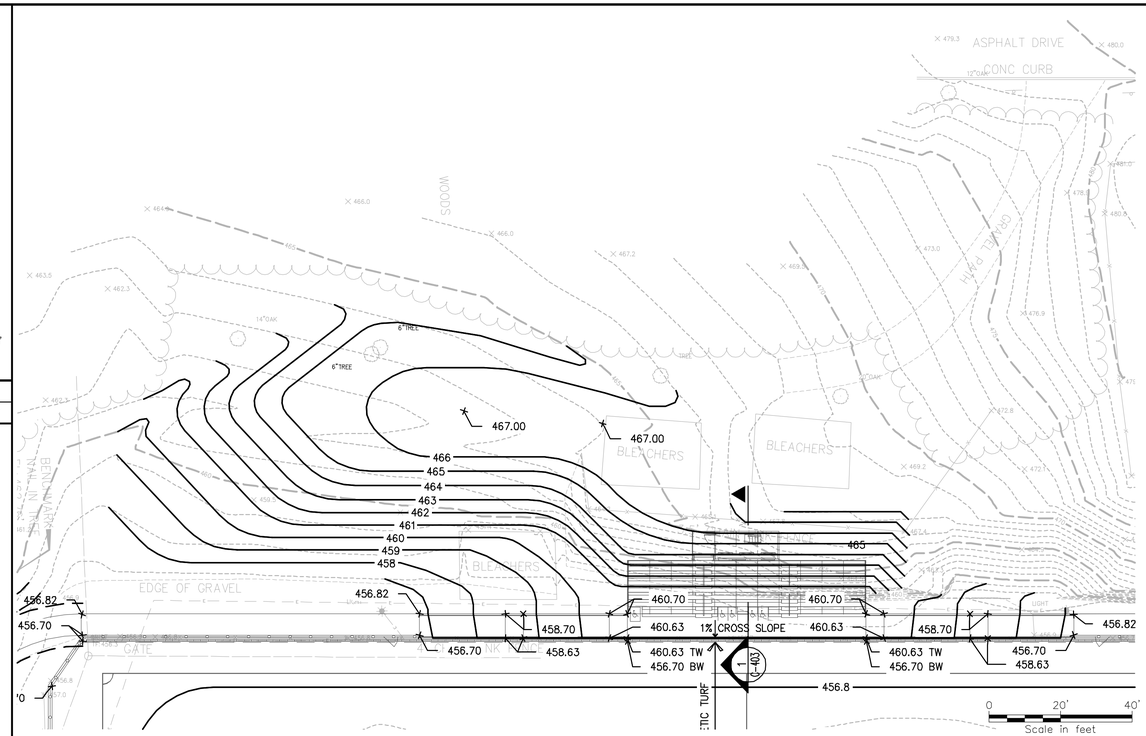

2 GRANDSTAND, RAMP AND WEST PATH
PLAN
SCALE: 1" = 20'-0"

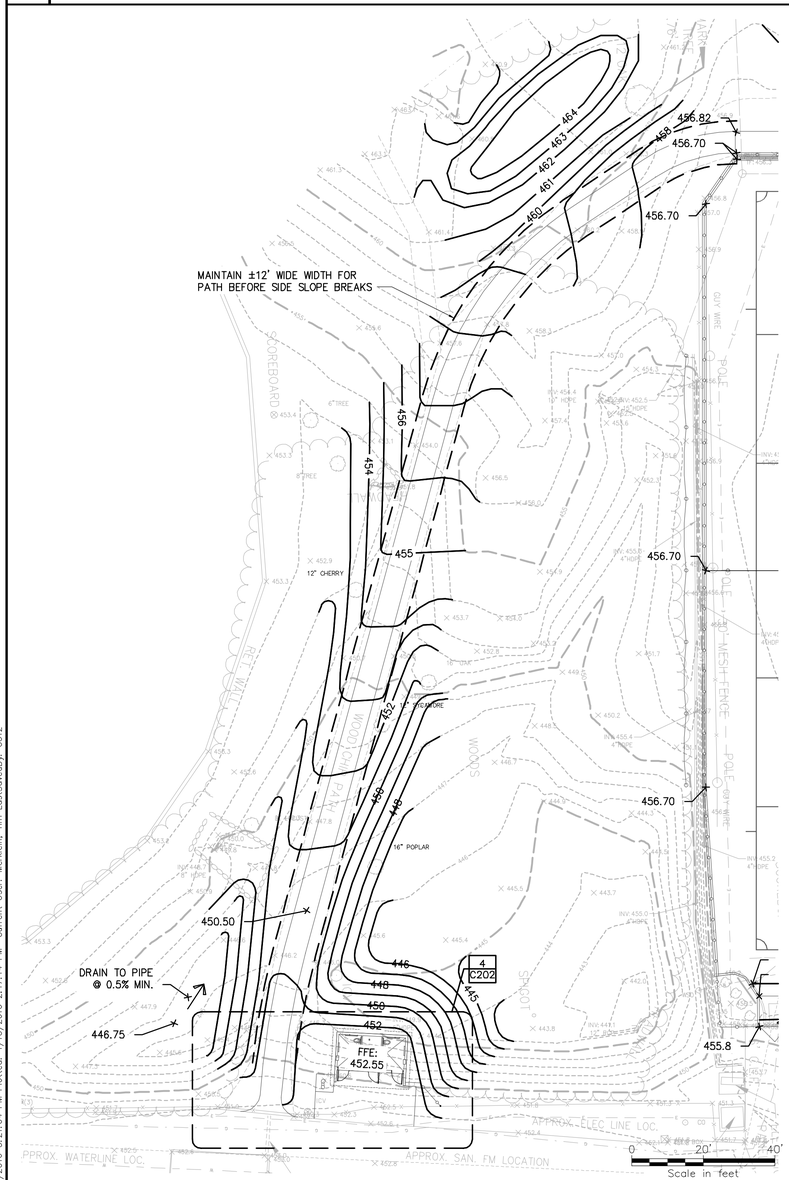

3 SOUTH PATH AND RESTROOM BUILDING
PLAN
SCALE: 1" = 10'-0"

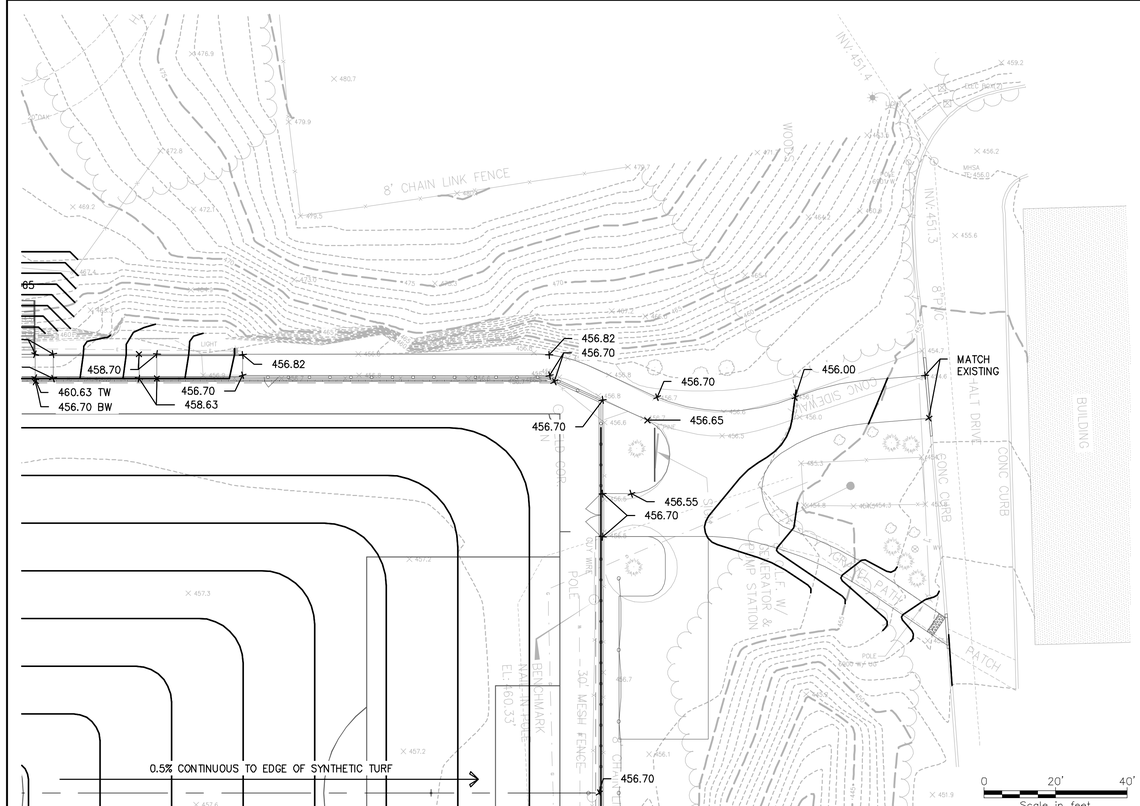

1 NORTH SIDEWALK AND ACCESS DRIVE
PLAN
SCALE: 1" = 20'-0"

LEGEND

—— ——	LIMITS OF WORK
—— 218 ——	CONTOUR LINE
26.90-G ——×	SPOT ELEVATION
←	SHEET FLOW DIRECTION

NOTES:

1. SEE SHEET C-201 FOR GENERAL SITE GRADING NOTES.

Drawing Copyright © 2015

CHA
5 Campus Drive
Parsippany, NJ 07054-4406
973.538.3320 • www.chacompanies.com

PETER L. LILHOLT, JR.
PROFESSIONAL ENGINEER N.J. LIC.
24GE04894200

IT IS A VIOLATION OF LAW FOR ANY PERSON, UNLESS THEY ARE ACTING UNDER THE DIRECTION OF A LICENSED PROFESSIONAL ENGINEER, ARCHITECT, LANDSCAPE ARCHITECT OR LAND SURVEYOR TO ALTER AN ITEM IN ANY WAY. IF AN ITEM BEARING THE STAMP OF A LICENSED PROFESSIONAL IS ALTERED, THE ALTERING ENGINEER, ARCHITECT, LANDSCAPE ARCHITECT OR LAND SURVEYOR SHALL STAMP THE DOCUMENT AND INCLUDE THE NOTATION "ALTERED BY" FOLLOWED BY THEIR SIGNATURE, THE DATE OF SUCH ALTERATION, AND A SPECIFIC DESCRIPTION OF THE ALTERATION.

PIONEERS

WILLIAM PATERSON UNIVERSITY

SOCCER FIELD IMPROVEMENTS

300 POMPTON RD.
WAYNE, NJ 07470

No.	Submittal / Revision	App'd.	By	Date
1	CONSTRUCTION DOCUMENTS	DD	TM	01/11/16

SITE GRADING PLAN

Designed By:	Drawn By:	Checked By:
DD	TM	DD
Issue Date: 01/11/2016	Project No: 30059	Scale: AS SHOWN

Drawing No.:
C-202

File: V:\PROJECTS\ANY\K-M\30059\CADD_ACAD\C201-203-30059.DWG
Saved: 1/7/2016 3:21:04 PM Plotted: 1/13/2016 2:17:14 PM Current User: Merkein, Tim LastSavedBy: 3512

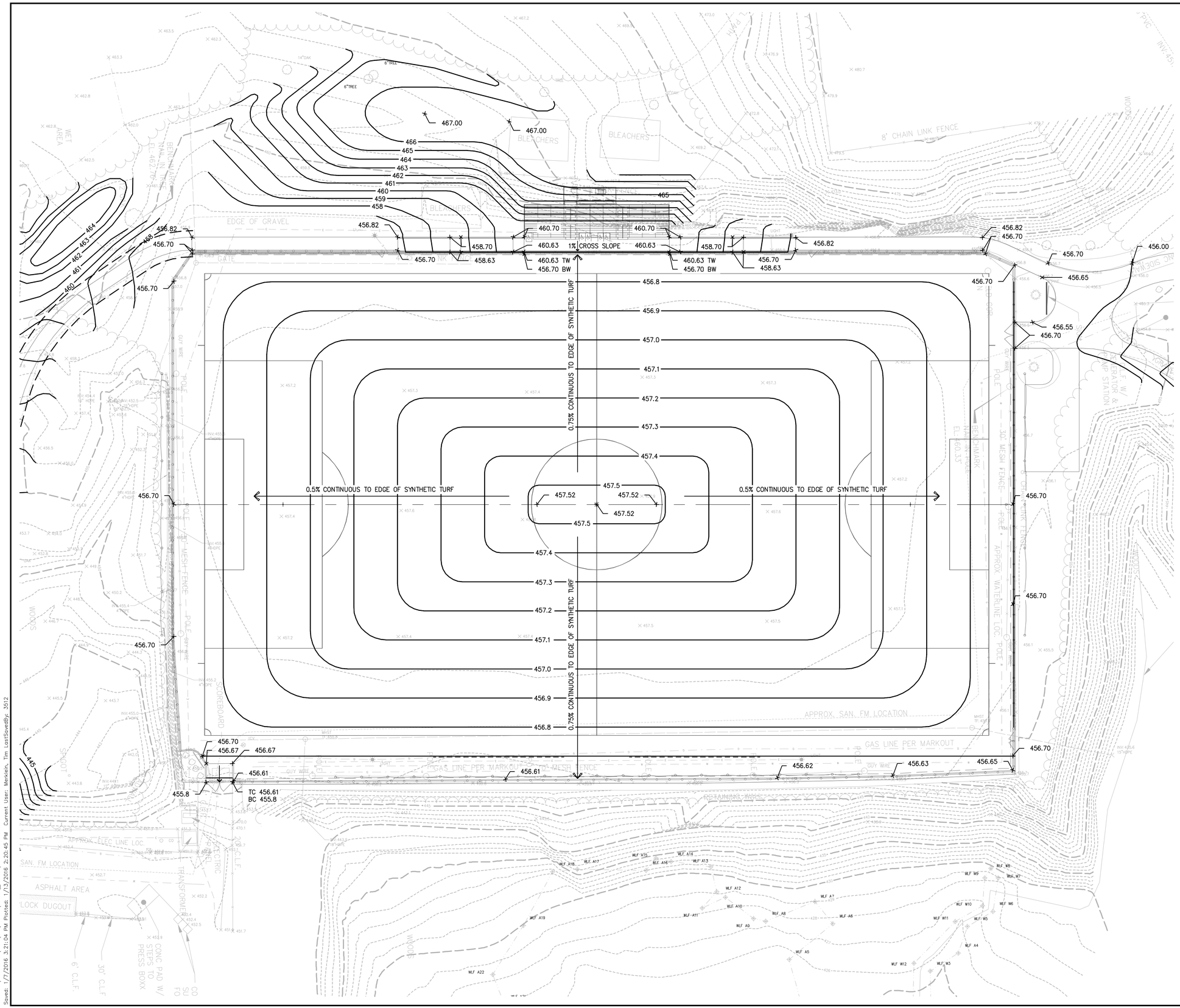

LEGEND

—— ——	LIMITS OF WORK
—— 218 ——	CONTOUR LINE
26.90–G ——×	SPOT ELEVATION
←	SHEET FLOW DIRECTION

NOTES:

1. SEE SHEET C–201 FOR GENERAL SITE GRADING NOTES.

0 20' 40'
Scale in feet

Drawing Copyright © 2015

CHA
6 Campus Drive
Parsippany, NJ 07054-4406
973.538.1320 • www.chacompanies.com

PETER L. LILHOLT, JR.
PROFESSIONAL ENGINEER N.J. LIC.
24GE04894200

IT IS A VIOLATION OF LAW FOR ANY PERSON, UNLESS THEY ARE ACTING UNDER THE DIRECTION OF A LICENSED PROFESSIONAL ENGINEER, ARCHITECT, LANDSCAPE ARCHITECT OR LAND SURVEYOR TO ALTER AN ITEM IN ANY WAY. IF AN ITEM BEARING THE STAMP OF A LICENSED PROFESSIONAL IS ALTERED, THE ALTERING ENGINEER, ARCHITECT, LANDSCAPE ARCHITECT OR LAND SURVEYOR SHALL STAMP THE DOCUMENT AND INCLUDE THE NOTATION "ALTERED BY" FOLLOWED BY THEIR SIGNATURE, THE DATE OF SUCH ALTERATION, AND A SPECIFIC DESCRIPTION OF THE ALTERATION.

PIONEERS

WILLIAM PATERSON UNIVERSITY

SOCCER FIELD IMPROVEMENTS

300 POMPTON RD.
WAYNE, NJ 07470

No.	Submittal / Revision	App'd.	By	Date
1	CONSTRUCTION DOCUMENTS	DD	TM	01/11/16

FIELD GRADING PLAN

Designed By:	Drawn By:	Checked By:
DD	TM	DD
Issue Date:	Project No:	Scale:
01/11/2016	30059	AS SHOWN

Drawing No.:
C-203

File: V:\PROJECTS\ANY\K4\30059\CAD_ACAD\C201-203-30059.DWG
Saved: 1/7/2016 3:21:04 PM Plotted: 1/13/2016 2:30:45 PM Current User: Merkelin, Tim LastSavedBy: 3512

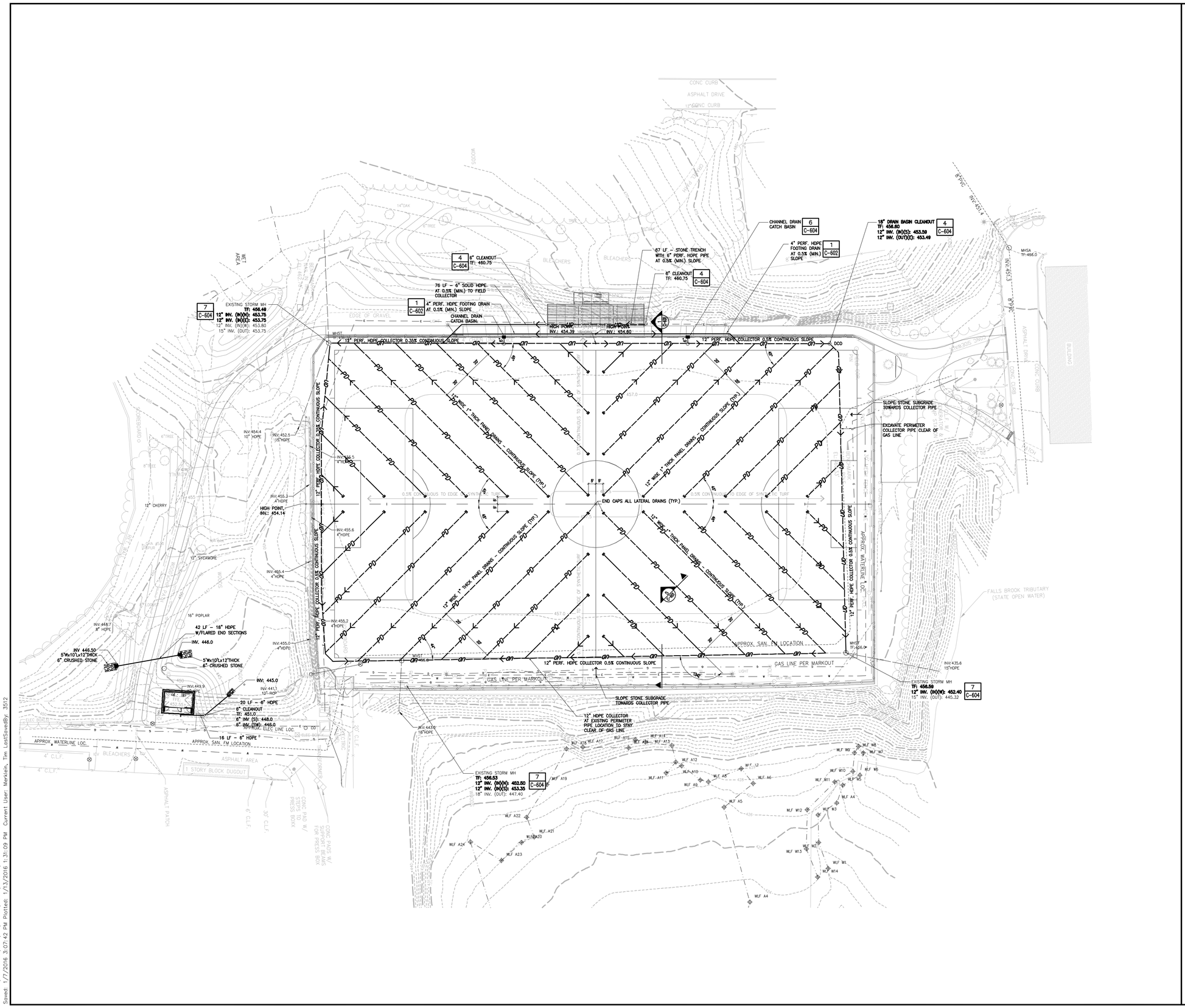

LEGEND

—— UD ——<	COLLECTOR DRAIN PIPE
—— PD 218 ——<	PANEL DRAIN
DCO	DRAIN BASIN CLEANOUT

NOTES:

1. PERIMETER COLLECTOR PIPE TO BE HDPE, PERFORATED AND SIZED AS SHOWN.

2. LATERAL TRENCHES WITH PANEL DRAINS ARE SPACED 20 FEET ON CENTER, EXCEPT WHERE INDICATED.

3. CAP ENDS OF ALL PANEL DRAINS. PLACE WASHER/BOLT ON END OF CAP FOR METAL DETECTION.

4. FIELD COLLECTOR AND PANEL DRAINS TO SLOPE AS INDICATED.

5. GEOTEXTILE FABRIC TO BE PLACED AT BOTTOM AND SIDES OF COLLECTOR PIPE AND LATERAL TRENCHES.

6. PLAYING FIELD CONTRACTOR TO COORDINATE AND BE AWARE OF SITE STORM PIPING AND STRUCTURES WITHIN THE CONSTRUCTION BOUNDARIES AS SHOWN ON THE DRAWINGS.

7. CONTRACTOR TO PROTECT DRAINAGE LINES DURING CONSTRUCTION FROM DEBRIS, INCLUDING SOIL OR GRAVEL MATERIAL OR OTHER TRASH FROM ENTERING OR BLOCKING LINES.

8. CONTRACTOR TO AVOID TRAFFIC OVER INSTALLED DRAINAGE TRENCHES TO PREVENT CRUSHING OF PIPE.

9. COLLECTOR PIPE TO BE LOCATED 5' FROM EDGE OF CHANNEL DRAIN AND AS SHOWN ON DRAWINGS, RE: 1/C–601.

10. COORDINATE DRAINAGE CONNECTION AND INVERTS WITH EXISTING, IN–PLACE CONDITIONS. VERIFY EXISTING INVERTS BEFORE INSTALLATION.

11. CONTRACTOR SHALL CONTACT ENGINEER IMMEDIATELY IF DISCREPANCIES ARE FOUND IN FIELD.

12. EXCESS TOPSOIL SHALL BE STOCKPILED ON SITE OR BE DISPOSED, AS DIRECTED BY THE OWNER. CONTRACTOR TO COORDINATE WITH OWNER.

13. STONE SUBGRADE BELOW SYNTHETIC TURF SHALL BE SLOPED AWAY FROM RETAINING WALL AND TOWARDS 12" HDPE COLLECTOR PIPE.

0 30' 60'
Scale in feet

Drawing Copyright © 2015

CHA
6 Campus Drive
Parsippany, NJ 07054-4406
973.538.2325 - www.chacompanies.com

PETER L. LILHOLT, JR.
PROFESSIONAL ENGINEER N.J. LIC.
24GE04894200

IT IS A VIOLATION OF LAW FOR ANY PERSON, UNLESS THEY ARE ACTING UNDER THE DIRECTION OF A LICENSED PROFESSIONAL ENGINEER, ARCHITECT, LANDSCAPE ARCHITECT OR LAND SURVEYOR TO ALTER AN ITEM IN ANY WAY. IF AN ITEM BEARING THE STAMP OF A LICENSED PROFESSIONAL IS ALTERED, THE ALTERING ENGINEER, ARCHITECT, LANDSCAPE ARCHITECT OR LAND SURVEYOR SHALL STAMP THE DOCUMENT AND INCLUDE THE NOTATION "ALTERED BY" FOLLOWED BY THEIR SIGNATURE, THE DATE OF SUCH ALTERATION, AND A SPECIFIC DESCRIPTION OF THE ALTERATION.

PIONEERS

WILLIAM PATERSON UNIVERSITY

SOCCER FIELD IMPROVEMENTS

300 POMPTON RD.
WAYNE, NJ 07470

No.	Submittal / Revision	App'd.	By	Date
1	CONSTRUCTION DOCUMENTS			01/11/16

FIELD DRAINAGE PLAN

Designed By:	Drawn By:	Checked By:
WM	TM	DD
Issue Date:	Project No:	Scale:
01/11/2016	30059	AS SHOWN

Drawing No.:
C-204

File: V:\PROJECTS\ANY\K4\30059\CADD_ACAD\C204-30059.DWG
Saved: 1/7/2016 3:07:42 PM Plotted: 1/13/2016 1:31:09 PM Current User: Merkele, Tim LastSavedBy: 3512

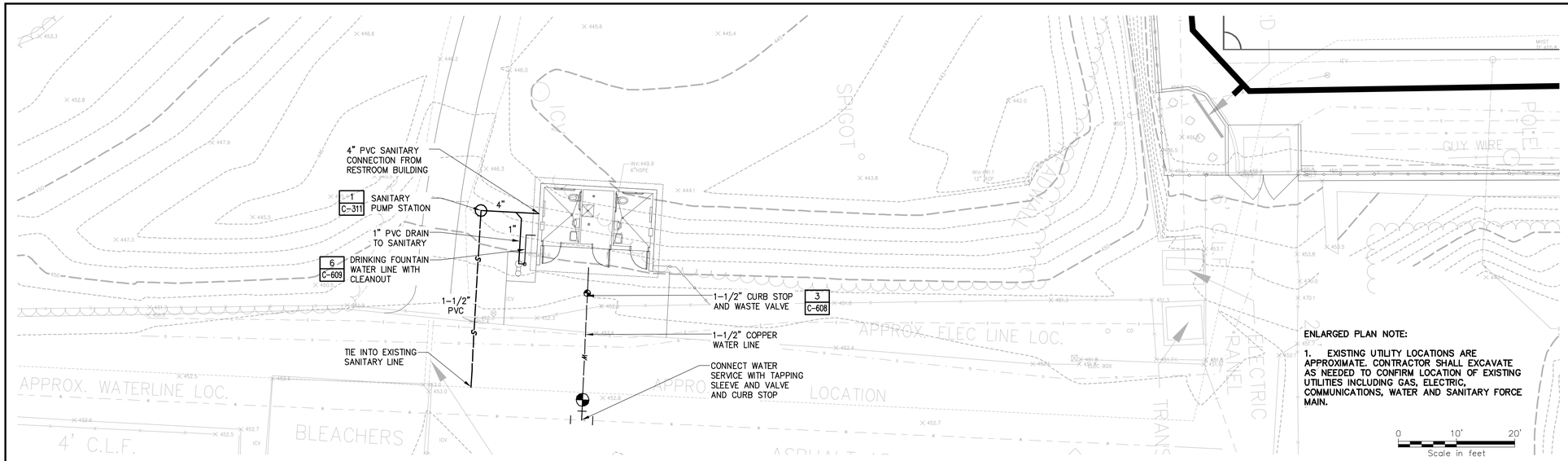

ENLARGED PLAN NOTE:

1. EXISTING UTILITY LOCATIONS ARE APPROXIMATE. CONTRACTOR SHALL EXCAVATE AS NEEDED TO CONFIRM LOCATION OF EXISTING UTILITIES INCLUDING GAS, ELECTRIC, COMMUNICATIONS, WATER AND SANITARY FORCE MAIN.

2 ENLARGED UTILITY PLAN AT RESTROOM BUILDING

PLAN

SCALE: 1" = 10'-0"

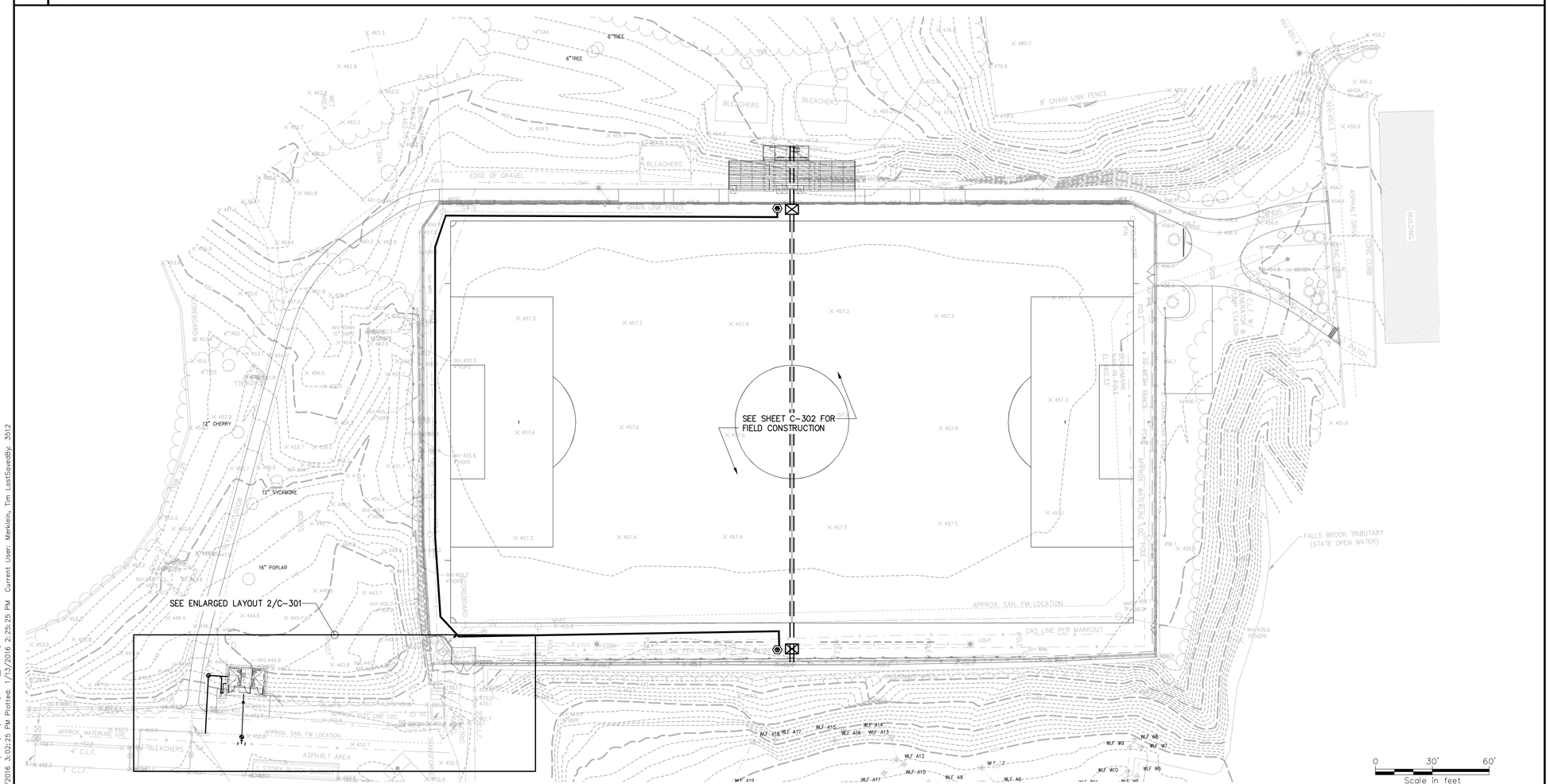

1 OVERALL SITE UTILITY PLAN

PLAN

SCALE: 1" = 10'-0"

LEGEND

- WATER
- SANITARY SEWER
- FIELD CONDUIT
- IRRIGATION MAINLINE
- COMBOX
- QUICK COUPLER

NOTES:

1. PLACE ALL QUICK COUPLERS AT PERIMETER OF FIELD IMMEDIATELY ADJACENT TO FIELD CURB, AND SPACED AS SHOWN.

2. CONTACT ENGINEER PRIOR TO COMMENCEMENT OF THE WORK FOR REVIEW OF THE PROCESS.

3. DESIGN IS DIAGRAMMATIC. ALL PIPING, VALVES, ETC. IS TO SHOW INTENT AND DESIGN CLARIFICATION. CONTRACTOR TO INSTALL IN A MANNER CONFORMING TO DETAILS AND CONSIDERATION OF OTHER COMPONENTS OF THE PLAYING FIELD SYSTEM.

4. IRRIGATION MAINLINE TO BE PLACED IN TRENCH WITH COLLECTOR PIPE, RE: 1/C-601.

5. RE: SITE DETAIL SHEETS FOR SYSTEM DETAILS, OR AS NOTED.

6. EXERCISE EXTREME CARE IN EXCAVATION & WORKING AROUND EXISTING UTILITIES. VERIFY LOCATION & CONDITIONS OF ALL UTILITIES AND BE RESPONSIBLE FOR DAMAGE TO UTILITIES. FIELD ADJUST QUICK COUPLER LOCATIONS SO AS TO AVOID CONFLICTS WITH UTILITIES.

7. RE: SPECIFICATIONS FOR FURTHER IRRIGATION MATERIALS, EQUIPMENT & INSTALLATION INFORMATION.

Drawing Copyright © 2015

CHA
6 Campus Drive
Parsippany, NJ 07054-4406
973.538.3320 • www.chacompanies.com

PETER L. LILHOLT, JR.
PROFESSIONAL ENGINEER N.J. LIC.
24GE04894200

IT IS A VIOLATION OF LAW FOR ANY PERSON, UNLESS THEY ARE ACTING UNDER THE DIRECTION OF A LICENSED PROFESSIONAL ENGINEER, ARCHITECT, LANDSCAPE ARCHITECT OR LAND SURVEYOR TO ALTER AN ITEM IN ANY WAY. IF AN ITEM BEARING THE STAMP OF A LICENSED PROFESSIONAL IS ALTERED, THE ALTERING ENGINEER, ARCHITECT, LANDSCAPE ARCHITECT OR LAND SURVEYOR SHALL STAMP THE DOCUMENT AND INCLUDE THE NOTATION "ALTERED BY" FOLLOWED BY THEIR SIGNATURE, THE DATE OF SUCH ALTERATION, AND A SPECIFIC DESCRIPTION OF THE ALTERATION.

PIONEERS

WILLIAM PATERSON UNIVERSITY

SOCCER FIELD IMPROVEMENTS

300 POMPTON RD.
WAYNE, NJ 07470

No.	Submittal / Revision	App'd.	By	Date
1	CONSTRUCTION DOCUMENTS	DD	TM	01/11/16

OVERALL SITE UTILITY PLAN

Designed By:	Drawn By:	Checked By:
DD	TM	DD
Issue Date: 01/11/2016	Project No: 30059	Scale: AS SHOWN

Drawing No.:

C-301

File: V:\PROJECTS\ANY\K4\30059\C4DD_ACAD\C-301-30059.DWG
Saved: 1/7/2016 3:02:25 PM Plotted: 1/13/2016 2:25:25 PM Current User: Merkelin, Tim LastSavedBy: 3512

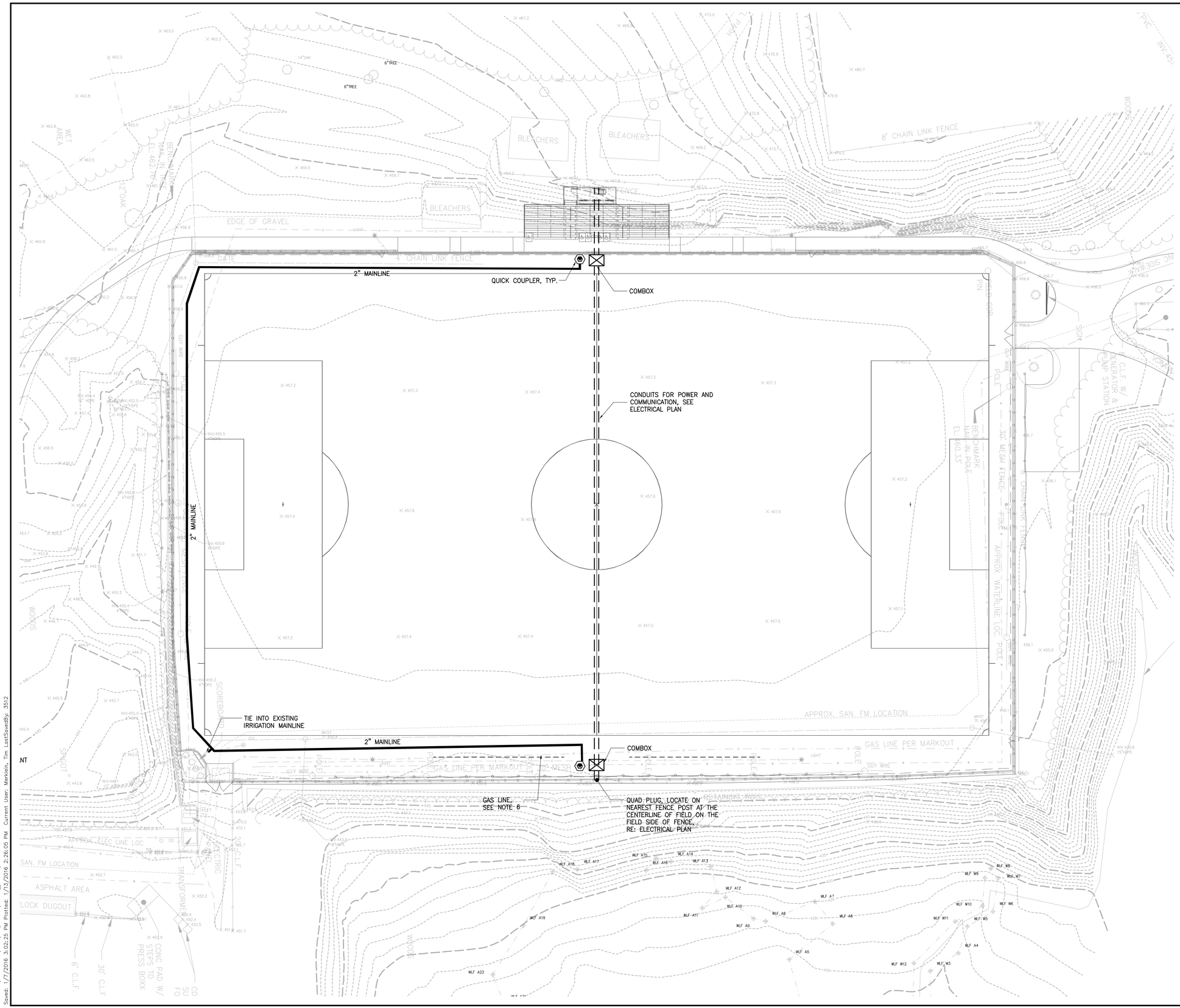

LEGEND

- WATER
- SANITARY SEWER
- FIELD CONDUIT
- IRRIGATION MAINLINE
- COMBOX
- QUICK COUPLER

NOTES:

1. PLACE ALL QUICK COUPLERS AT PERIMETER OF FIELD IMMEDIATELY ADJACENT TO FIELD CURB, AND SPACED AS SHOWN.

2. CONTACT ENGINEER PRIOR TO COMMENCEMENT OF THE WORK FOR REVIEW OF THE PROCESS.

3. DESIGN IS DIAGRAMMATIC. ALL PIPING, VALVES, ETC. IS TO SHOW INTENT AND DESIGN CLARIFICATION. CONTRACTOR TO INSTALL IN A MANNER CONFORMING TO DETAILS AND CONSIDERATION OF OTHER COMPONENTS OF THE PLAYING FIELD SYSTEM.

4. IRRIGATION MAINLINE TO BE PLACED IN TRENCH WITH COLLECTOR PIPE, RE: 1/C-601.

5. RE: SITE DETAIL SHEETS FOR SYSTEM DETAILS, OR AS NOTED.

6. EXERCISE EXTREME CARE IN EXCAVATION & WORKING AROUND EXISTING UTILITIES. VERIFY LOCATION & CONDITIONS OF ALL UTILITIES AND BE RESPONSIBLE FOR DAMAGE TO UTILITIES. FIELD ADJUST QUICK COUPLER LOCATIONS SO AS TO AVOID CONFLICTS WITH UTILITIES.

7. RE: SPECIFICATIONS FOR FURTHER IRRIGATION MATERIALS, EQUIPMENT & INSTALLATION INFORMATION.

0 20' 40'
Scale in feet

Drawing Copyright © 2015

CHA
5 Campus Drive
Parsippany, NJ 07054-4406
973.538.3320 • www.chacompanies.com

PETER L. LILHOLT, JR.
PROFESSIONAL ENGINEER N.J. LIC.
24GE04894200

IT IS A VIOLATION OF LAW FOR ANY PERSON, UNLESS THEY ARE ACTING UNDER THE DIRECTION OF A LICENSED PROFESSIONAL ENGINEER, ARCHITECT, LANDSCAPE ARCHITECT OR LAND SURVEYOR TO ALTER AN ITEM IN ANY WAY. IF AN ITEM BEARING THE STAMP OF A LICENSED PROFESSIONAL IS ALTERED, THE ALTERING ENGINEER, ARCHITECT, LANDSCAPE ARCHITECT OR LAND SURVEYOR SHALL STAMP THE DOCUMENT AND INCLUDE THE NOTATION "ALTERED BY" FOLLOWED BY THEIR SIGNATURE, THE DATE OF SUCH ALTERATION, AND A SPECIFIC DESCRIPTION OF THE ALTERATION.

PIONEERS

WILLIAM PATERSON UNIVERSITY

SOCCER FIELD IMPROVEMENTS

300 POMPTON RD.
WAYNE, NJ 07470

No.	Submittal / Revision	App'd.	By	Date
1	CONSTRUCTION DOCUMENTS	DD	TM	01/11/16

FIELD UTILITY PLAN

Designed By:	Drawn By:	Checked By:
WM	TM	XXX
Issue Date: 01/11/2016	Project No: 30059	Scale: AS SHOWN

Drawing No.:
C-302

File: V:\PROJECTS\ANY\K4\30059\CADD_ACAD\C-301-30059.DWG
Saved: 1/7/2016 3:02:23 PM Plotted: 1/13/2016 2:26:05 PM Current User: Merkelin, Tim LastSavedBy: 3512

6 NOT USED

. SCALE: N.T.S.

5 NOT USED

. SCALE: N.T.S.

4 NOT USED

. SCALE: N.T.S.

3 SENTRY ADVISOR

. SCALE: N.T.S.

SENTRY ADVISOR

BASIC SENTRY SIMPLEX

REMOTE MONITORING OF:
* HIGH LEVEL ALARM
* PUMP RUNNING

WEB INTERFACE PROVIDES:
* RUN TIME HISTORY
  * DAILY, CUMULATIVE, LAST, MIN., MAX., AVG.
* CYCLE HISTORY
  * DAILY, CUMULATIVE
* EXTENDED RUN TIME ALERTS
  * CYCLE, DAILY
* GENERATE PUMP RUN AND/OR ALARM EVENT REPORTS
* MAP LOCATION OF EACH GRINDER PUMP IN THE SYSTEM WITH STATUS INDICATION

BACKUP BATTERY FOR POWER LOSS NOTIFICATION

USES EXISTING BOARD ALARM DRY CONTACTS

FACTORY INSTALLED, RETROFIT, OR STANDALONE CONFIGURATIONS AVAILABLE

OPERATING TEMPERATURE RANGE:
-20C TO +70C

INPUT VOLTAGE:
85 - 264VAC

MODEM CONTAINS:
* 2 AUXILIARY A-D INPUTS
* 3 AUXILIARY DIGITAL OUTPUTS

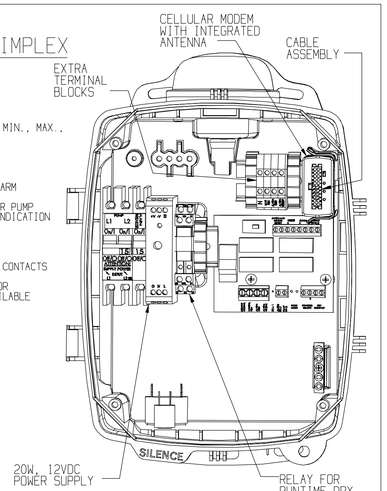

TYPICAL SENTRY PANEL IN SENTRY ENCLOSURE, SHOWN FOR REF. ENCLOSURE DOOR NOT SHOWN

BF	11/08/2013	CTT	-	11/11/2013
DR BY	DATE	CHK'D	ISSUE	DATE

ENVIRONMENT ONE CORPORATION

CUT SHEET,ADVISOR,BASIC SENTRY

240V,2P

NA0440P02

LISTED

2 LATERAL KIT SDR HDPE PIPE

. SCALE: N.T.S.

STAINLESS STEEL LATERAL KIT 1-1/4" SDR 11 HDPE PIPE

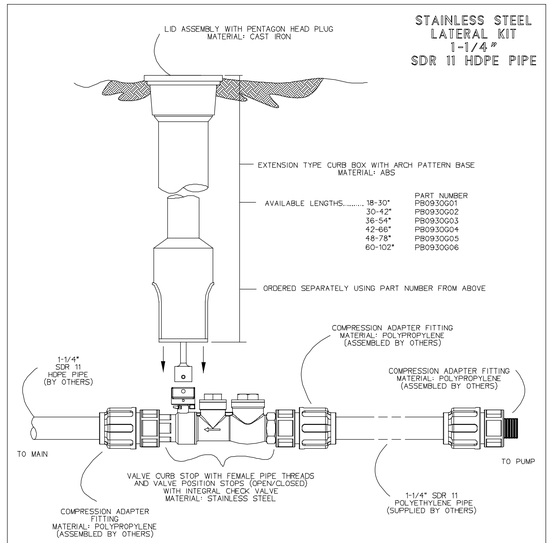

NOTES:

1. SS CURB STOP/CHECK VALVE AND FITTINGS ARE PROVIDED SEPARATELY, TO BE ASSEMBLED BY OTHERS
2. TO ASSEMBLE, APPLY A DOUBLE LAYER OF TEFLON TAPE, AND A LAYER OF PIPE DOPE (SUPPLIED BY OTHERS) TO THE THREADS ON THE PLASTIC FITTINGS AND INSTALL PER THE MANUFACTURER'S INSTRUCTIONS
   *FOR SS FITTING INTO SS THREAD, USE PIPE DOPE OR TEFLON TAPE, NOT BOTH
3. ASSEMBLY IS TO BE PRESSURE TESTED (BY OTHERS)
4. ASSEMBLY IS TO BE USED WITH SDR11 HDPE PIPE
5. TO ORDER SS LATERAL KIT, USE PART NUMBER NC0193G01
6. CURB BOX IS TO BE ORDERED SEPARATELY, SEE ABOVE

KIT PARTS ARE NOT ASSEMBLED

SGS	DN	11/02/11	B	3/16
DR BY	CHK'D	DATE	ISSUE	SCALE

SEWER SYSTEMS

STAINLESS STEEL LATERAL KIT
1-1/4" SDR 11 HDPE PIPE

NA0330P02

1 GRINDER PUMP STATION

. SCALE: N.T.S.

OPTIONS : ☐ DH071-93 (HARD WIRED LEVEL CONTROLS)
☐ DR071-93 (WIRELESS LEVEL CONTROLS)

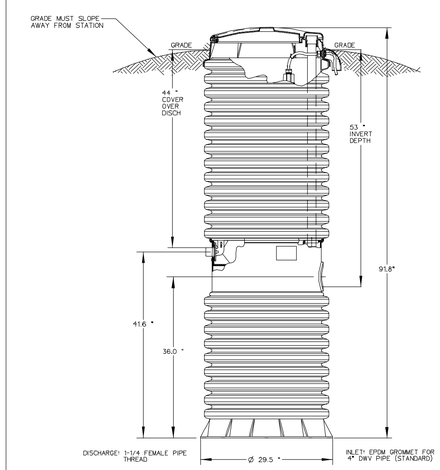

CONCRETE BALLAST MAY BE REQUIRED SEE INSTALLATION INSTRUCTIONS FOR DETAILS

NOTE: DIMENSIONS ARE FOR REF ONLY

AD	CAH	07/12/07	B	1/16
DR BY	CHK'D	DATE	ISSUE	SCALE

SEWER SYSTEMS

MODEL DH071-93 / DR071-93

NA0050P06

Drawing Copyright © 2015

CHA
6 Campus Drive
Parsippany, NJ 07054-4406
973.538.3130 - www.chacompanies.com

PETER L. LILHOLT, JR.
PROFESSIONAL ENGINEER N.J. LIC.
24GE04694200

IT IS A VIOLATION OF LAW FOR ANY PERSON, UNLESS THEY ARE ACTING UNDER THE DIRECTION OF A LICENSED PROFESSIONAL ENGINEER, ARCHITECT, LANDSCAPE ARCHITECT OR LAND SURVEYOR TO ALTER AN ITEM IN ANY WAY. IF AN ITEM BEARING THE STAMP OF A LICENSED PROFESSIONAL IS ALTERED, THE ALTERING ENGINEER, ARCHITECT, LANDSCAPE ARCHITECT OR LAND SURVEYOR SHALL ATTACH TO THE ITEM THE ADDITION TO THE NOTATION "ALTERED BY" FOLLOWED BY THEIR SIGNATURE, THE DATE OF SUCH ALTERATION, AND A SPECIFIC DESCRIPTION OF THE ALTERATION.

PIONEERS

WILLIAM PATERSON UNIVERSITY

SOCCER FIELD IMPROVEMENTS

300 POMPTON RD.
WAYNE, NJ 07470

No.	Submittal / Revision	App'd.	By	Date
1	CONSTRUCTION DOCUMENTS	GMH	DLB	01/11/16

PUMP STATION

Designed By:	Drawn By:	Checked By:
DLO	GMH	DLB
Issue Date: 01/11/2016	Project No: 30059	Scale:

Drawing No.:

C-311

File: V:\PROJECTS\ANY\K4\30059\CADD_ACAD\C311-30059.DWG
Saved: 1/7/2016 3:27:25 PM Plotted: 1/13/2016 1:34:57 PM Current User: Merklein, Tim LastSavedBy: 3512

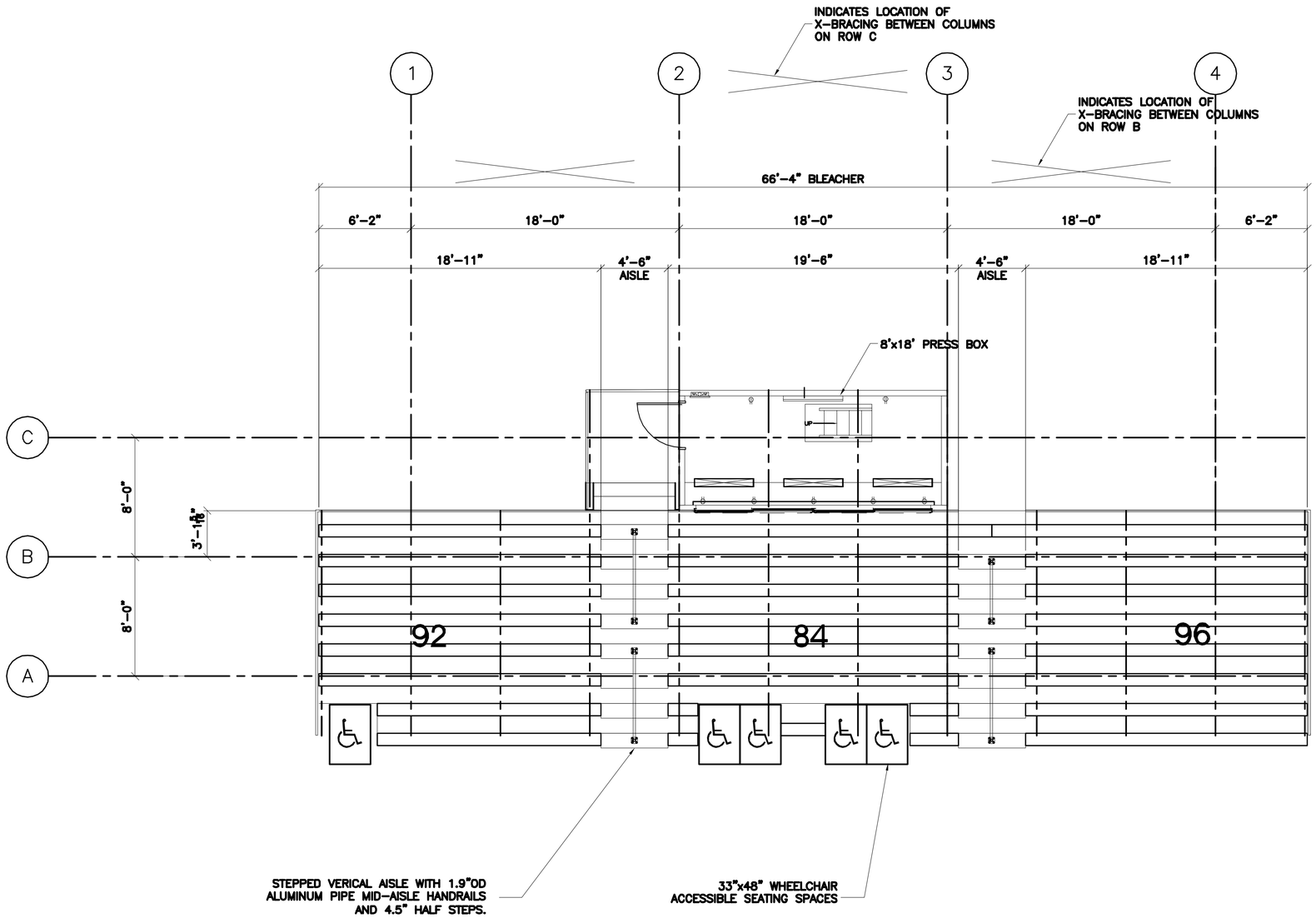

SEATING PLAN

SCALE: 1/4" = 1'-0"

ROWS 8	**ELEVATION** 0"		
RISE 12"	**RUN** 24"		
DECK SYSTEM – INTERLOCKING			
DECK FINISH – SLIP AND STAIN RESISTANT			
BENCH SEATING CAPACITY		272	
CHAIR SEATING CAPACITY		0	
WHEELCHAIR SEATING CAPACITY		5	
COMPANION SEATING CAPACITY		2	
TOTAL SEATING CAPACITY		279	

GUARDRAIL.
1/2" SQUARE VERTICAL PICKET RAILS MOUNTED TO 2x2 STEEL TUBE POSTS.

GUARDRAIL BEHIND WHEELCHAIR SPACES.
–TOP RAIL LOCATED 36" ABOVE FOOTBOARD OF ROW BEHIND WHEELCHAIR SPACES.

SIDE GUARDRAIL.
–TOP RAIL LOCATED 42" MIN ABOVE LEADING EGDE OF SEATBOARD.

REAR GUARDRAIL.
–TOP RAIL LOCATED 42" MIN ABOVE REAR ROW SEATBOARD.

SEATING PLAN
PLAN
SCALE: 1/4" = 1'-0"

File: V:\PROJECTS\ANY\K4\30059\CADD_ACAD\C401-402-30059.DWG
Saved: 1/7/2016 2:44:46 PM Plotted: 1/13/2016 1:35:59 PM Current User: Merklein, Tim LastSavedBy: 3512

Drawing Copyright © 2015

CHA
6 Campus Drive
Parsippany, NJ 07054-4406
973.538.3100 - www.chacompanies.com

PETER L. LILHOLT, JR.
PROFESSIONAL ENGINEER N.J. LIC.
24GE04894200

IT IS A VIOLATION OF LAW FOR ANY PERSON, UNLESS THEY ARE ACTING UNDER THE DIRECTION OF A LICENSED PROFESSIONAL ENGINEER, ARCHITECT, LANDSCAPE ARCHITECT OR LAND SURVEYOR TO ALTER AN ITEM IN ANY WAY. IF AN ITEM BEARING THE STAMP OF A LICENSED PROFESSIONAL IS ALTERED, THE ALTERING PROFESSIONAL SHALL STAMP THE DOCUMENT AND INCLUDE THE NOTATION "ALTERED BY" FOLLOWED BY THEIR SIGNATURE, THE DATE OF SUCH ALTERATION, AND A SPECIFIC DESCRIPTION OF THE ALTERATION.

PIONEERS

WILLIAM PATERSON UNIVERSITY

SOCCER FIELD IMPROVEMENTS

300 POMPTON RD.
WAYNE, NJ 07470

No.	Submittal / Revision	App'd.	By	Date
1	CONSTRUCTION DOCUMENTS	DD	MD	01/11/16

GRANDSTAND SEATING PLAN

Designed By:	Drawn By:	Checked By:
MD	MD	DD
Issue Date: 01/11/2016	Project No: 30059	Scale: AS SHOWN

Drawing No.:
C-401

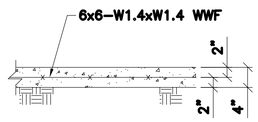

3 SECTION OF SLAB ON GRADE
SECTION SCALE: N.T.S.

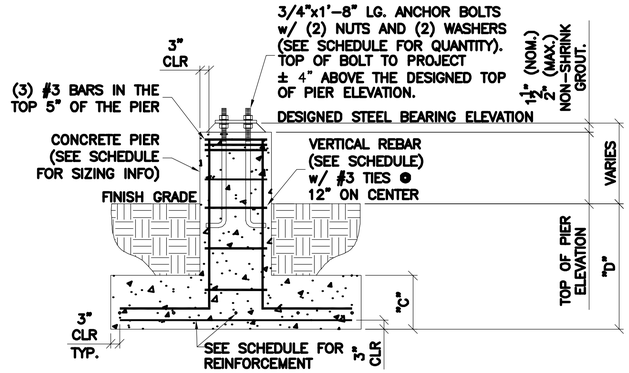

2 SECTION THROUGH FOUNDATION
SECTION SCALE: N.T.S.

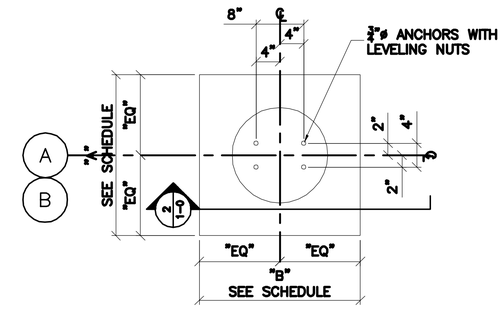

1 ANCHOR BOLT LAYOUT – PLAN OF FOOTING & PIER (F1)(F2)
PLAN SCALE: N.T.S.

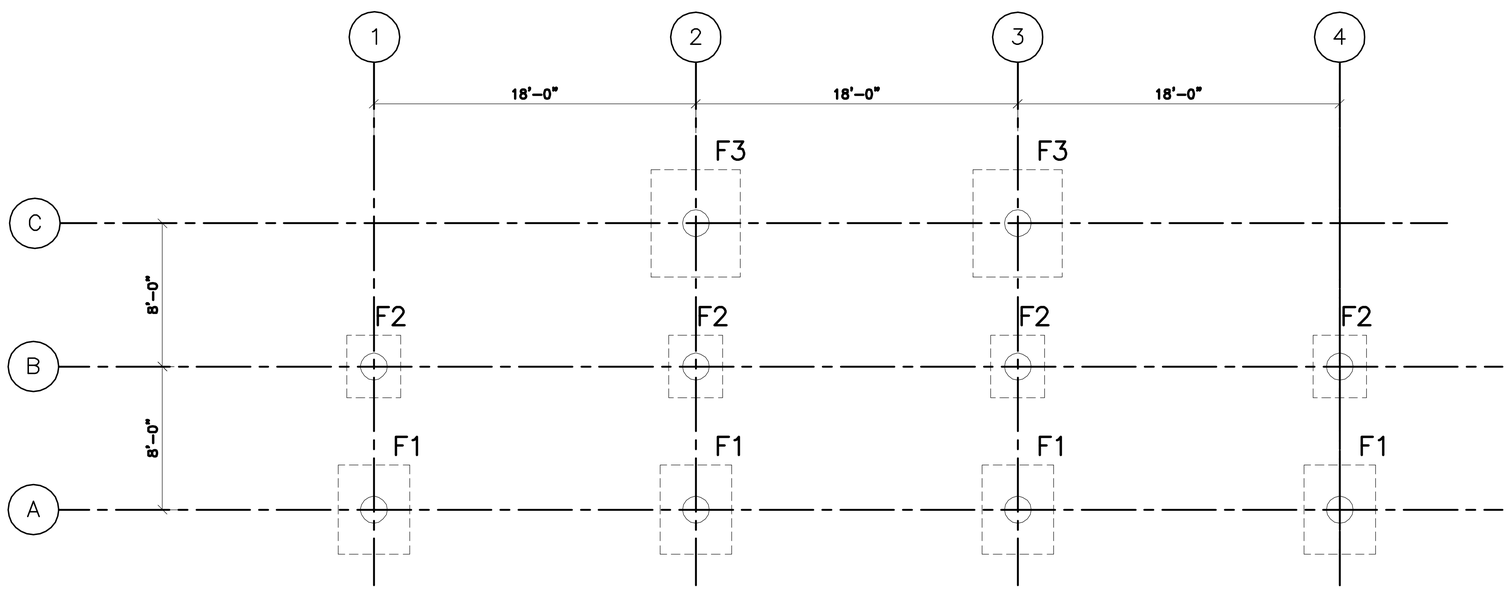

FOUNDATION PLAN
SCALE: 1/4" = 1'–0"

NOTES:

1. THE ELEVATION OF THE TOP OF THE CONCRETE PIER IS DESIGNED TO BE 1 1/2" BELOW THE STEEL BEARING ELEVATION. TOLERANCES FOR THE TOP OF CONCRETE PIER SHALL BE +/– 1/8". THE CONCRETE INSTALLER IS RESPONSIBLE FOR NON–SHRINK GROUTING.

   THE TOP OF CONCRETE MAY BE RAISED TO MATCH THE STEEL BEARING ELEVATION AT THE INSTALLER'S DISCRETION. INSTALLER IS THEN RESPONSIBLE FOR ANY ADJUSTMENTS.

2. ALL COLUMN ANCHOR BOLTS MUST HAVE A 4" PROJECTION (+/– 1/8") ABOVE THE TOP OF PIER ELEVATION.

3. MAXIMUM HORIZONTAL TOLERANCE OF ANCHOR BOLT PLACEMENT SHALL BE 1/8".

4. ALL UNDERGROUND UTILITIES ARE TO BE LOCATED AND MARKED DURING REVIEW PROCESS PRIOR TO FOUNDATION EXCAVATION. DANT CORP. SHALL NOT BE RESPONSIBLE FOR DAMAGE TO UNDERGROUND UTILITIES.

5. MINIMUM FOOTING DEPTH IS DETERMINED BY STATE AND LOCAL BUILDING CODES.

6. SOIL BEARING PRESSURE IS TO BE DETERMINED BY SOILS ENGINEER.

FOOTING SCHEDULE						PIER SCHEDULE				
MARK	SIZE "A"	SIZE "B"	SIZE "C"	SIZE "D"	REINFORCING EA. WAY	SIZE	REINFORCING	# OF ANCHORS	SIZE OF ANCHORS	ANCHOR BOLT TEMPLATE NO.
F1	5'–0"	4'–0"	1'–0"	3'–0"	#5@12"O.C.	18"ø	8 #6 BARS	4	¾" X 1'–8" WITH 3" HOOK	0039245
F2	3'–6"	3'–0"	1'–0"	3'–0"	#5@12"O.C.	18"ø	8 #6 BARS	4	¾" X 1'–8" WITH 3" HOOK	0055517
F3	6'–0"	5'–0"	1'–0"	3'–0"	#5@12"O.C.	18"ø	8 #6 BARS	4	¾" X 1'–8" WITH 3" HOOK	0055517

ASSUMED FROST DEPTH – 36"
ASSUMED SOIL BEARING CAPACITY – 3000 PSF

FOUNDATION PLAN
PLAN SCALE: 1/4" = 1'–0"

Drawing Copyright © 2015

CHA
6 Campus Drive
Parsippany, NJ 07054-4406
973.539.2125 · www.chacompanies.com

PETER L. LILHOLT, JR.
PROFESSIONAL ENGINEER N.J. LIC.
24GE04894200

IT IS A VIOLATION OF LAW FOR ANY PERSON, UNLESS THEY ARE ACTING UNDER THE DIRECTION OF A LICENSED PROFESSIONAL ENGINEER, ARCHITECT, LANDSCAPE ARCHITECT OR LAND SURVEYOR TO ALTER AN ITEM IN ANY WAY. IF AN ITEM BEARING THE STAMP OF A LICENSED PROFESSIONAL IS ALTERED, THE ALTERING ENGINEER, ARCHITECT, LANDSCAPE ARCHITECT OR LAND SURVEYOR SHALL STAMP THE DOCUMENT AND INCLUDE THE NOTATION "ALTERED BY" FOLLOWED BY THEIR SIGNATURE, THE DATE OF SUCH ALTERATION, AND A SPECIFIC DESCRIPTION OF THE ALTERATION.

PIONEERS

WILLIAM PATERSON UNIVERSITY

SOCCER FIELD IMPROVEMENTS

300 POMPTON RD.
WAYNE, NJ 07470

No.	Submittal / Revision	App'd.	By	Date
1	CONSTRUCTION DOCUMENTS	DD	MD	01/11/16

GRANDSTAND FOUNDATION PLAN

Designed By:	Drawn By:	Checked By:
MD	MD	DD
Issue Date: 01/11/2016	Project No: 30059	Scale: AS SHOWN

Drawing No.:
C-402

File: V:\PROJECTS\ANY\X4\30059\CADD_ACAD\C401-402-30059.DWG
Saved: 1/7/2016 2:44:46 PM Plotted: 1/13/2016 1:36:21 PM Current User: Merklein, Tim LastSavedBy: 3512

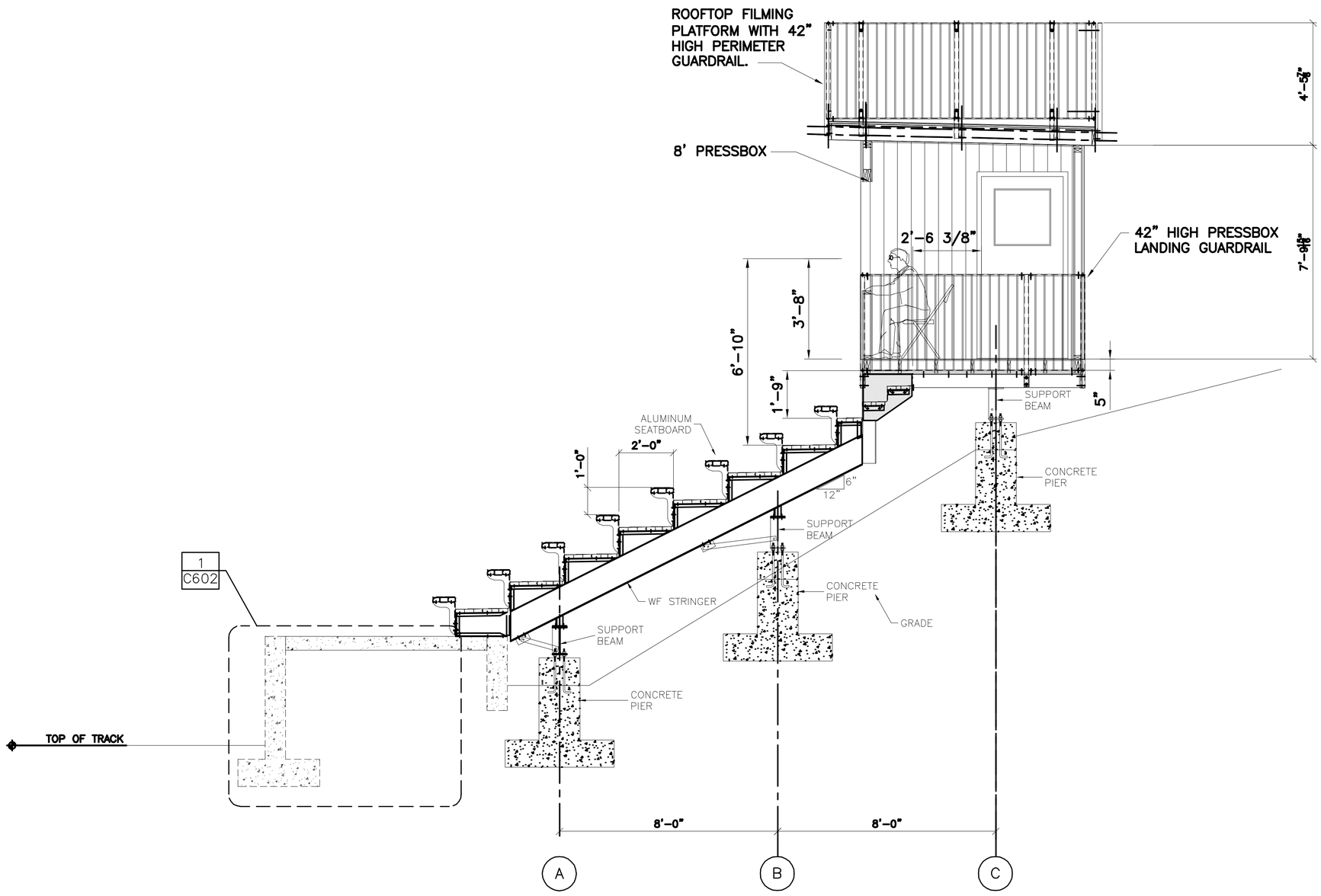

1 TYPICAL SECTION THRU BLEACHER AT SEATING AREA

1 TYPICAL SECTION THROUGH BLEACHER AT SEATING AREA

SECTION

SCALE: 1/2" = 1'-0"

Drawing Copyright © 2015

CHA
6 Campus Drive
Parsippany, NJ 07054-4406
973.539.2125 - www.chacompanies.com

PETER L. LILHOLT, JR.
PROFESSIONAL ENGINEER N.J. LIC.
24GE04894200

IT IS A VIOLATION OF LAW FOR ANY PERSON, UNLESS THEY ARE ACTING UNDER THE DIRECTION OF A LICENSED PROFESSIONAL ENGINEER, ARCHITECT, LANDSCAPE ARCHITECT OR LAND SURVEYOR, TO ALTER AN ITEM IN ANY WAY. IF AN ITEM BEARING THE STAMP OF A LICENSED PROFESSIONAL IS ALTERED, THE ALTERING ENGINEER, ARCHITECT, LANDSCAPE ARCHITECT OR LAND SURVEYOR SHALL STAMP THE DOCUMENT AND INCLUDE THE NOTATION "ALTERED BY" FOLLOWED BY THEIR SIGNATURE, THE DATE OF SUCH ALTERATION, AND A SPECIFIC DESCRIPTION OF THE ALTERATION.

PIONEERS

WILLIAM PATERSON UNIVERSITY

SOCCER FIELD IMPROVEMENTS

300 POMPTON RD.
WAYNE, NJ 07470

No.	Submittal / Revision	App'd.	By	Date
1	CONSTRUCTION DOCUMENTS	DD	MD	01/11/16

GRANDSTAND SECTION

Designed By:	Drawn By:	Checked By:
MD	MD	DD
Issue Date: 01/11/2016	Project No: 30059	Scale: AS SHOWN

Drawing No.:

C-403

File: V:\PROJECTS\ANY\K4\30059\CADD_ACAD\C403-30059.DWG
Saved: 1/7/2016 2:42:39 PM Plotted: 1/13/2016 1:37:15 PM Current User: Merklein, Tim LastSavedBy: 3512

OCCUPIED SPACE = 145

DESIGN SPECIFICATIONS

DESIGN AND CONSTRUCTION

1. ALL DESIGN , MATERIALS AND WORKMANSHIP SHALL BE IN ACCORDANCE WITH THE FOLLOWING

TITLE 5:23 NEW JERSEY UNIFORM CONSTRUCTION CODE
2009 INTERNATIONAL BUILDING CODE NEW JERSEY EDITION
2009 INTERNATIONAL MECHANICAL CODE W/ N.J. AMENDMENTS
2011 NATIONAL ELECTRIC CODE W/ N.J. AMENDMENTS
2007 ASHRAE 90.1 W/ N.J. AMENDMENTS
2003 ICC/ANSI A117.1 ACCESSIBILITY CODE W/ N.J. AMENDMENTS

DESIGN LOADS

1. FLOOR DEAD LOAD	10 PSF	
2. FLOOR LIVE LOAD	100 PSF	
3. ROOF DEAD LOAD	10 PSF	
4. ROOF LIVE LOAD	50 PSF	
5. WALLS	25 PSF 8 PSF	UNIFORM VERTICAL PROJECTION DEAD LOAD
6. GROUND SNOW LOAD	35 PSF	
7. OCCUPANCY GROUP	B	
8. CONSTRUCTION TYPE	V-B	
9. OCCUPANCY LOAD	9 PERSONS	
10. SWAY	24 PLF	PARALLEL PER FT. OF ROW PARALLEL TO SEAT RUN
11. GUARD RAILS	200 LB 50 LB/FT 100 LB/FT	CONCENTRATED LATERAL LOAD UNIFORM LATERAL LOAD UNIFORM VERTICAL LOAD
12. HORIZONTAL WIND	Pv=20 PSF	
13. CATEGORY 2 WIND LOAD		115 MPH, EXPOSURE C
14. WIND IMPORTANCE FACTOR	1.0	
15. SEISMIC ZONE		SITE CLASS D DESIGN CATEGORY D

FASTENING SCHEDULE

BUILDING ELEMENT	FASTENER	NUMBER AND LOCATION
STUD TO SOLE PLATE	15GA X 2 1/2" LONG GALVANIZED STAPLE	(4) DIRECT
STUD TO CAP PLATE	15GA X 2 1/2" LONG GALVANIZED STAPLE	(4) DIRECT
CORNER STUDS	#8X3" SCREW	12" O.C. DIRECT
SOLE PLATE TO JOIST OR BLOCKING	16d COMMON	16" O.C. (9" O.C. AT SHEARWALLS)
DOUBLE CAP PLATE	15GA X 2 1/2" LONG GALVANIZED STAPLE	(2) 12" O.C. DIRECT
FLOOR JOISTS	16d COMMON	MIN. (3) DIRECT
DOUBLE EDGE RAIL	16d COMMON	MIN. (3) DIRECT
CEILING JOISTS TO PLATE	16d COMMON	MIN. (3) DIRECT
HEADER BEAMS TO TRIMMERS	15GA X 2 1/2" LONG GALVANIZED STAPLE	(6) EACH END OR (8) TOE NAIL
PLYWOOD ROOF AND WALL SHEATHING (1/2" OR LESS)	16GA X 1 1/2" LONG GALVANIZED STAPLE	4" O.C. DIRECT EDGES & 8" O.C. INTERMEDIATE SUPPORTS
PLYWOOD ROOF AND WALL SHEATHING (5/8" OR GREATER)	16GA X 2" LONG GALVANIZED STAPLE	4" O.C. DIRECT EDGES & 8" O.C. INTERMEDIATE SUPPORTS
PLYWOOD SUBFLOORING (5/8", 3/4")	6d RING SHANK	6" O.C. DIRECT EDGES & 12" O.C. INTERMEDIATE SUPPORTS
PARTICLE BOARD ROOF AND WALL SHEATHING (1/2" OR LESS)	16GA X 1 1/2" LONG GALVANIZED STAPLE	4" O.C. DIRECT EDGES & 8" O.C. INTERMEDIATE SUPPORTS
PARTICLE BOARD ROOF AND WALL SHEATHING (5/8" OR GREATER)	16GA X 2" LONG GALVANIZED STAPLE	4" O.C. DIRECT EDGES & 8" O.C. INTERMEDIATE SUPPORTS
SHEARWALL (END) TO RAFTERS	16d NAILS	12" O.C.
RAFTER TO TOP PLATES	(1) #8X4 SCREW	TOED EACH RAFTER

GENERAL STRUCTURAL INFORMATION

1. BUILDING HEIGHT NOT TO EXCEED 40'.
2. INTERIOR PARTITIONS TO BE CONSTRUCTED TO WITHSTAND A 5 PSF HORIZONTAL FORCE.
3. INTERIOR WALL BOARD SHALL BE $\frac{5}{8}$" NOMINAL THICKNESS. TESTED W/ MATERIALS SUSPENDED FROM NON-COMBUSTABLE BACKING
4. ALL LUMBER TO BE GRADED AND MARKED.
5. COMPRESSION PLATE REQUIRED TO ENDURE WOOD TO WOOD CONTACT AT BEARING WALL TO ROOF JOINT CONNECTIONS.
6. HEATING CAPACITY SUBJECT TO LOCAL JURISDICTION AND APPROVAL
7. EXTERIOR BRACING PROVIDED BY $\frac{1}{2}$" CDX AND GLUED W/ APPROVED PVA GLUE AT ALL STUD TO END WALL CONNECTIONS.
8. APPROVED DATA PLATE AND STATE LABEL TO BE LOCATED ON MAIN ENTRANCE PANEL.
9. ON SITE STRUCTURE TO MEET THE FOLLOWING:
   - UPLIFT RATING FROM RIM JOIST TO SUPPORT AND RESIST 2100 LBS @6'-0" O.C.
   - RATING OF HORIZONTAL CONNECTION TO BE A MINIMUM OF 2670 LBS @ 6'-0" O.C.
   - BEARING SUPPORT OF THE UNDERSTRUCTURE TO HAVE MIN. CAPACITY OF 8000 LBS @ 6'-0" O.C.
10. ATTIC VENTILATION SHALL NOT BE LESS THAN 1 / 150 OF THE HORIZONTAL AREA TO BE VENTILATED.
11. THE BUILDING EXTERIOR AND ALL FACILITIES WITHIN THE BUILDING SHALL BE IDENTIFIED WITH THE INTERNATIONAL SYMBOL OF ACCESSIBILITY.
12. BUILDER/DEALER SHALL BE RESPONSIBLE FOR ON SITE BARRIER FREE PROVISIONS. BUILDING APPROACH SHALL HAVE A MINIMUM WIDTH OF 5' AND A GRADIENT OF NOT MORE THAN 1' IN 20'
13. ALL LOCKS TO BE UNLOCKABLE FROM THE INTERIOR WITHOUT THE USE OF A KEY OR SPECIAL KNOWLEDGE.
14. CORROSION RESISTANT FLASHING AT TOP AND SIDES OF DOORS, WINDOWS AND AT ROOF PENETRATIONS.
15. ALL GLAZING WITHIN A 24" ARC OF VERTICAL DOOR EDGES IN THE CLOSED POSITION TO BE SAFETY GLAZED AND MARKED SO.
16. INTERIOR FINISH SHALL BE CLASS A.
17. RESTROOM AND HANDICAPPED RESTROOM FACILITIES ARE TO BE PROVIDED IN AN ADJACENT BUILDING LOCATED ON THE SAME PROPERTY HAVING ADEQUATE FACILITIES TO HANDLE THE ADDITIONAL OCCUPANT LOAD CREATED BY THE ADDITION OF THIS BUILDING TO THE SITE. THE LOCAL OFFICIAL HAVING JURISDICTION SHALL VERIFY THE EXISTENCE OF THESE FACILITIES.
18. THE MINIMUM SEPARATION OF THE UNIT FROM ANY PROPERTY LINE OR ASSUMED PROPERTY LINE IS 15'.
19. THIS BUILDING DOES NOT CONTAIN PLUMBING FACILITIES. PLUMBING FACILITIES SHALL BE PROVIDED ON-SITE SUBJECT TO THE LOCAL AUTHORITY HAVING JURISDICTION.
20. FIRE EXTINGUISHERS SUPPLIED & INSTALLED ON-SITE BY OTHERS APPROVED BY LOCAL JURISDICTION.

GENERAL ELECTRICAL INFORMATION

1. ALL WIRING TO BE ENCASED IN THIN ALL EMT CONDUIT MIN. 12THHN COPPER WIRE.
2. ALL RECEPTACLES TO BE GROUNDING TYPE.
3. MAIN PANEL TO BE MARKED SUITABLE FOR USE AS SERVICE EQUIPMENT, AND TO BE EQUIPPED WITH BREAKER/FUSE TYPE OVER CURRENT PROTECTION.
4. PROPER THERMAL OVERLOAD PROTECTION TO BE PROVIDED FOR ALL MOTORS.
5. DISCONNECTING MEANS WITHIN SITE REQUIRED FOR ALL MOTORS.
6. WEATHERPROOF PROTECTION REQUIRED FOR ALL OUTDOOR LIGHTS, RECEPTACLES AND DISCONNECTS.
7. PROPER WORKING CLEARANCES TO BE PROVIDED AND MAINTAINED AROUND ALL ELECTRICAL EQUIPMENT.
8. ALL FLUORESCENT FIXTURES REQUIRE THERMAL PROTECTION AND PROPER CLEARANCES FROM INSULATION, ALSO APPLICABLE FOR INCANDESCENT FIXTURES.
9. EXIT LIGHTS (IF ELECTRIC) MUST BE FED FROM AN APPROVED EMERGENCY SERVICE CONNECTED AHEAD OF, BUT NOT WITHIN MAIN SERVICE DISCONNECTING MEANS ENCLOSURE, AND INSTALLED AS PER SERVICE REQUIREMENTS, OR BE BATTERY BACK UP TYPE UNITS.
10. SERVICE CONDUCTORS LOCATED WITHIN THE PERIMETER OF THE BUILDING SHALL BE INSTALLED PER NEC.
11. ELECTRICAL WIRING TO BE INSTALLED PER NEC.
12. ALL DATA/ TELECOMMUNICATION CONDUCTORS TO BE INSTALLED AND TERMINATED ON-SITE BY OTHERS.
13. ALL WIRING TO BE COPPER 0 TO 2,000 VOLTS, COMPLYING W/ ARTICLE 310, NEC AND NO SMALLER THAN #12, AWG, INSULATED CONDUCTORS SHALL NOT EXCEED THE CAPACITY RATINGS AS SCHEDULED IN TABLES 310. NEC AND PROVIDED AND COMPLYING CIRCUIT PROTECTION.

DISCLAIMERS

IT IS THE SOLE RESPONSIBILITY OF THE CUSTOMER TO VERIFY THAT THE APPROVAL DRAWINGS SATISFY LOCAL, STATE AND FEDERAL REGULATIONS. IT IS RECOMMENDED THAT THE DRAWINGS BE REVIEWED AND APPROVED BY LOCAL AUTHORITIES WITH JURISDICTIONAL AUTHORITY. REVISIONS AFTER REVIEW MAY RESULT IN CHANGE ORDERS FOR ADDITIONAL TIME AND/OR MONEY. THE APPROVAL DRAWINGS ARE NOT TO BE USED AS CONSTRUCTION DRAWINGS.

Drawing Copyright © 2015

CHA
6 Campus Drive
Parsippany, NJ 07054-4406
973.538.2325 - www.chacompanies.com

PETER L. LILHOLT, JR.
PROFESSIONAL ENGINEER N.J. LIC.
24GE04894200

IT IS A VIOLATION OF LAW FOR ANY PERSON, UNLESS THEY ARE ACTING UNDER THE DIRECTION OF A LICENSED PROFESSIONAL ENGINEER, ARCHITECT, LANDSCAPE ARCHITECT OR LAND SURVEYOR TO ALTER AN ITEM IN ANY WAY. IF AN ITEM BEARING THE STAMP OF A LICENSED PROFESSIONAL IS ALTERED, THE ALTERING ENGINEER, ARCHITECT, LANDSCAPE ARCHITECT OR LAND SURVEYOR SHALL STAMP THE DOCUMENT AND INCLUDE THE NOTATION "ALTERED BY" FOLLOWED BY THEIR SIGNATURE, THE DATE OF SUCH ALTERATION, AND A SPECIFIC DESCRIPTION OF THE ALTERATION.

PIONEERS

WILLIAM PATERSON UNIVERSITY

SOCCER FIELD IMPROVEMENTS

300 POMPTON RD.
WAYNE, NJ 07470

No.	Submittal / Revision	App'd.	By	Date
1	CONSTRUCTION DOCUMENTS	DD	MD	01/11/16

PRESS BOX

Designed By:	Drawn By:	Checked By:
MD	MD	DD
Issue Date: 01/11/2016	Project No: 30059	Scale:

Drawing No.:
C-410

File: V:\PROJECTS\ANY\K4\30059\CADD_ACAD\C410-414-30059.DWG
Saved: 1/7/2016 3:03:02 PM Plotted: 1/13/2016 1:38:24 PM Current User: Merklein, Tim LastSavedBy: 3512

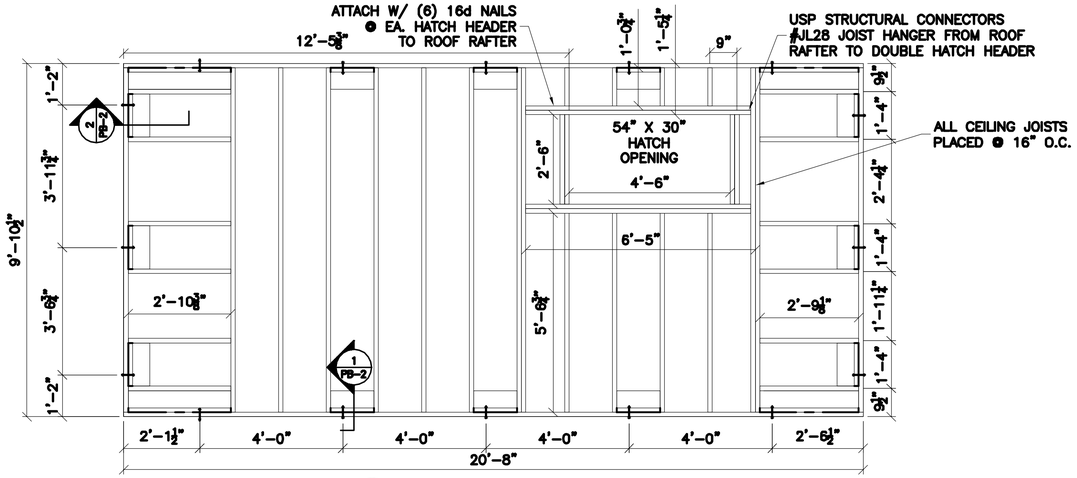

1 ROOF FRAMING PLAN

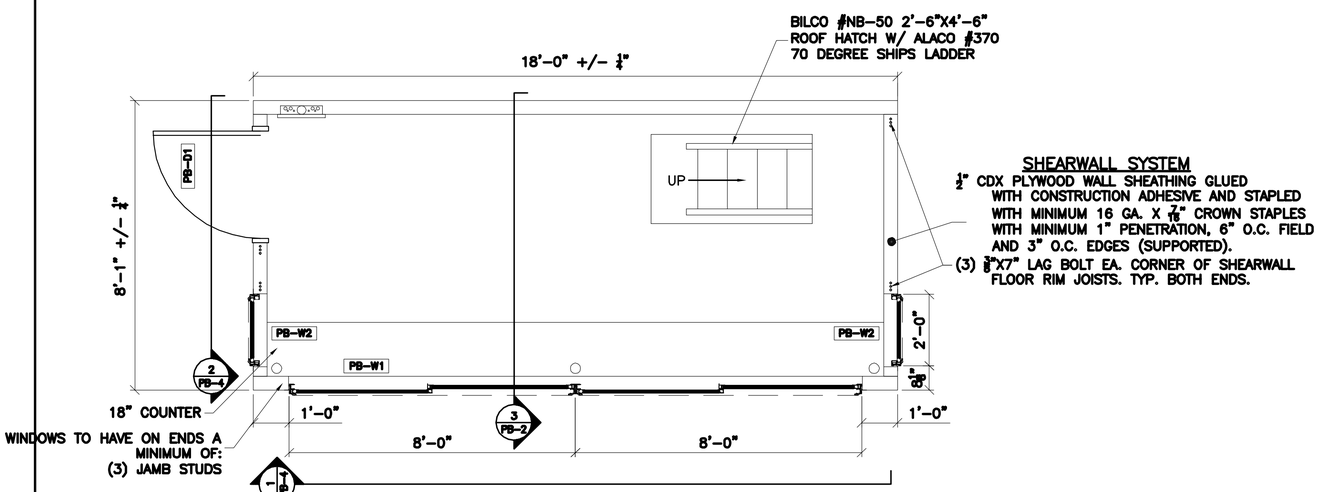

SHEARWALL SYSTEM

½" CDX PLYWOOD WALL SHEATHING GLUED WITH CONSTRUCTION ADHESIVE AND STAPLED WITH MINIMUM 16 GA. X 7/16" CROWN STAPLES WITH MINIMUM 1" PENETRATION, 6" O.C. FIELD AND 3" O.C. EDGES (SUPPORTED).

(3) 3/8"X7" LAG BOLT EA. CORNER OF SHEARWALL FLOOR RIM JOISTS. TYP. BOTH ENDS.

2 FLOOR PLAN

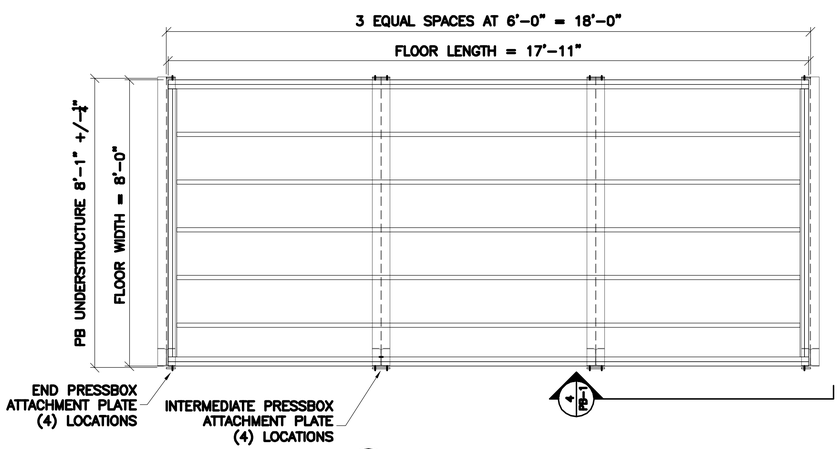

3 FLOOR FRAMING PLAN

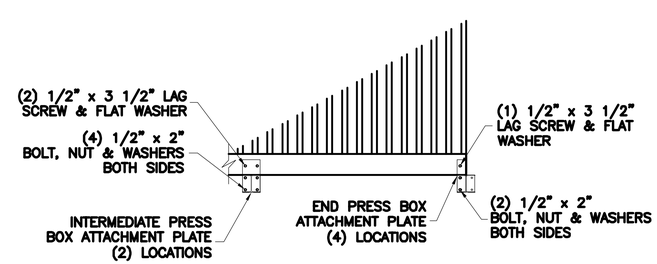

4 PRESSBOX ATTACHMENT DETAIL

Drawing Copyright © 2015

CHA
6 Campus Drive
Parsippany, NJ 07054-4406
973.539.3100 - www.chacompanies.com

PETER L. LILHOLT, JR.
PROFESSIONAL ENGINEER N.J. LIC.
24GE04894200

IT IS A VIOLATION OF LAW FOR ANY PERSON, UNLESS THEY ARE ACTING UNDER THE DIRECTION OF A LICENSED PROFESSIONAL ENGINEER, ARCHITECT, LANDSCAPE ARCHITECT OR LAND SURVEYOR TO ALTER AN ITEM IN ANY WAY. IF AN ITEM BEARING THE STAMP OF A LICENSED PROFESSIONAL IS ALTERED, THE ALTERING ENGINEER, ARCHITECT, LANDSCAPE ARCHITECT OR LAND SURVEYOR SHALL STAMP THE DOCUMENT AND INCLUDE THE NOTATION "ALTERED BY" FOLLOWED BY THEIR SIGNATURE, THE DATE OF SUCH ALTERATION, AND A SPECIFIC DESCRIPTION OF THE ALTERATION.

PIONEERS

WILLIAM PATERSON UNIVERSITY

SOCCER FIELD IMPROVEMENTS

300 POMPTON RD.
WAYNE, NJ 07470

No.	Submittal / Revision	App'd.	By	Date
1	CONSTRUCTION DOCUMENTS	DD	MD	01/11/16

PRESS BOX

Designed By:	Drawn By:	Checked By:
MD	MD	DD
Issue Date: 01/11/2016	Project No: 30059	Scale:

Drawing No.:

C-411

File: V:\PROJECTS\ANY\K4\30059\CADD_ACAD\C410-414-30059.DWG
Saved: 1/7/2016 3:03:02 PM Plotted: 1/13/2016 1:38:44 PM Current User: Merklein, Tim LastSavedBy: 3512

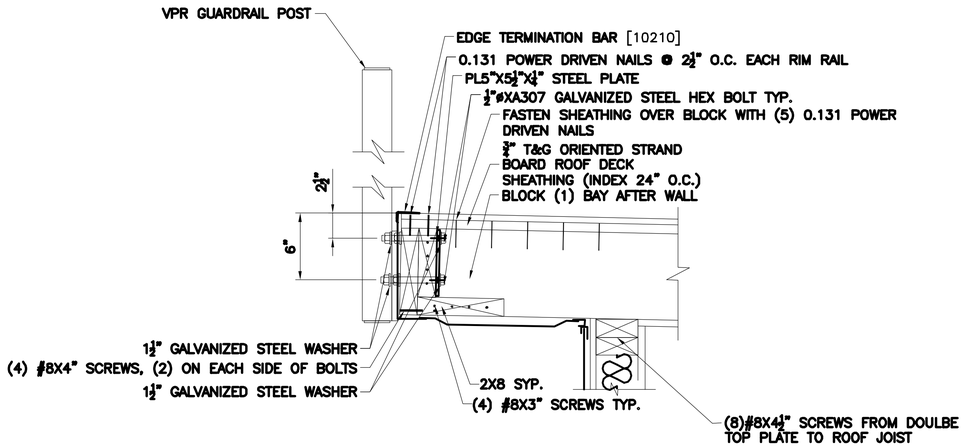

1 GUARDRAL CONNECTION DETAIL @ FRONT OF PRESS BOX

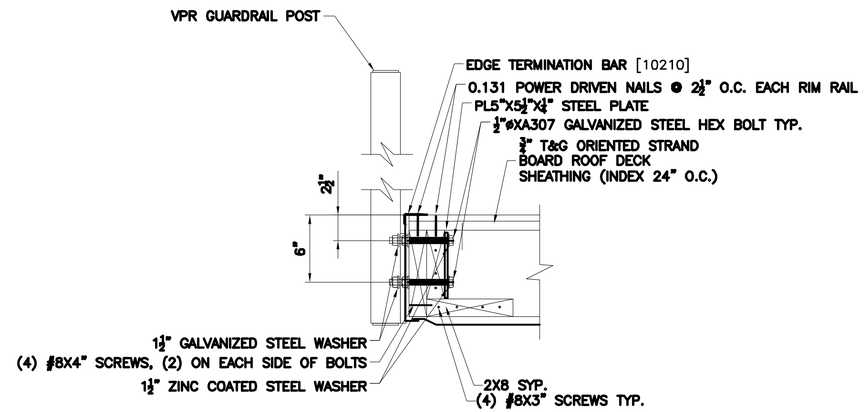

2 GUARDRAL CONNECTION DETAIL @ SIDES OF PRESSBOX

ROOFING SYSTEM

DECKING .060 POLYESTER REINFORCED SKID AND SPIKE RESISTANT PVC MEMBRANE FULLY ADHERED
¾" T&G ORIENTED STRAND BOARD ROOF DECK SHEATHING (INDEX 24" O.C.)
2X8 TRANSVERSE ROOF JOIST SYSTEM, #2 SYP, 16" O.C.
R-19 FIBERGLASS BATT INSULATION W/ VAPOR BARRIER
⅝" TYPE-X FIRE RATED GYPSUM CEILING BOARD, CLASS A RATED -TAPED AND BEDDED WITH SPRAY TEXTURED FINISH
MASTIC FASCIA AND PERFORATED SOFFIT (CONTINUOUS AROUND PERIMETER)

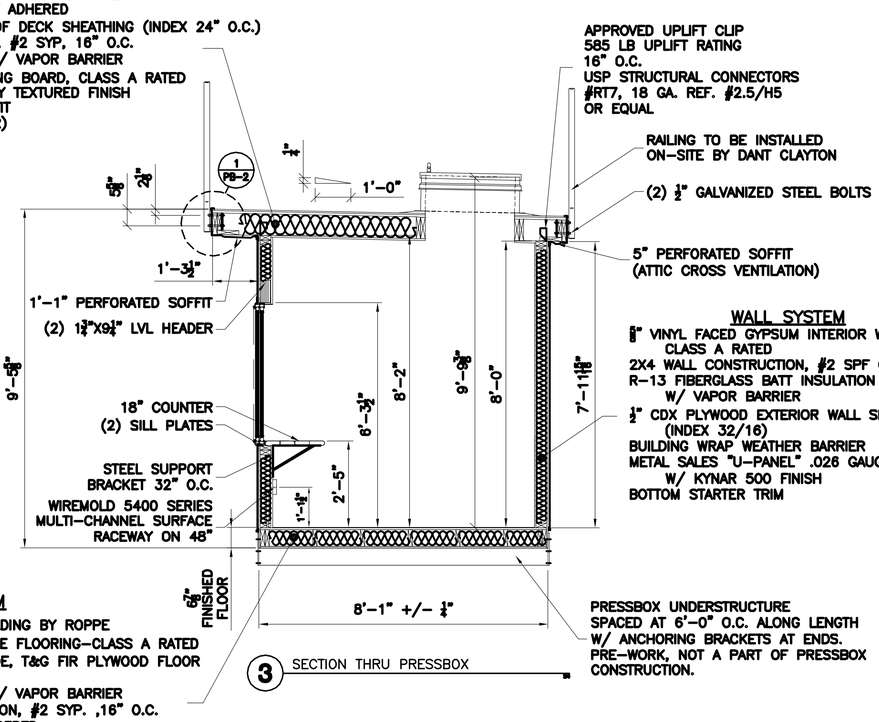

3 SECTION THRU PRESSBOX

WALL SYSTEM

⅝" VINYL FACED GYPSUM INTERIOR WALL PANELS CLASS A RATED
2X4 WALL CONSTRUCTION, #2 SPF OR BETTER, 16" O.C.
R-13 FIBERGLASS BATT INSULATION W/ VAPOR BARRIER
½" CDX PLYWOOD EXTERIOR WALL SHEATHING (INDEX 32/16)
BUILDING WRAP WEATHER BARRIER
METAL SALES "U-PANEL" .026 GAUGE RIBBED STEEL PANELS W/ KYNAR 500 FINISH
BOTTOM STARTER TRIM

FLOORING SYSTEM

4" THERMOPLASTIC RUBBER BASE MOLDING BY ROPPE
⅛" ARMSTRONG VINYL COMPOSITION TILE FLOORING-CLASS A RATED
¾"+¼" STURDIFLOOR, UNDERLAYMENT GRADE, T&G FIR PLYWOOD FLOOR DECKING (INDEX 24" O.C.)
R-19 FIBERGLASS BATT INSULATION W/ VAPOR BARRIER
2X6 LONGITUDINAL FLOOR CONSTRUCTION, #2 SYP. ,16" O.C. (SPLICED 16'-0" O.C. AND STAGGERED
½" PLYWOOD UNDERBELLY (INDEX 32/16) W/ CONTINUOUS VENT 96" O.C. (MIN. 2) (PAINTED INUSTRIAL GRADE ASPHALT BASED BLACK)

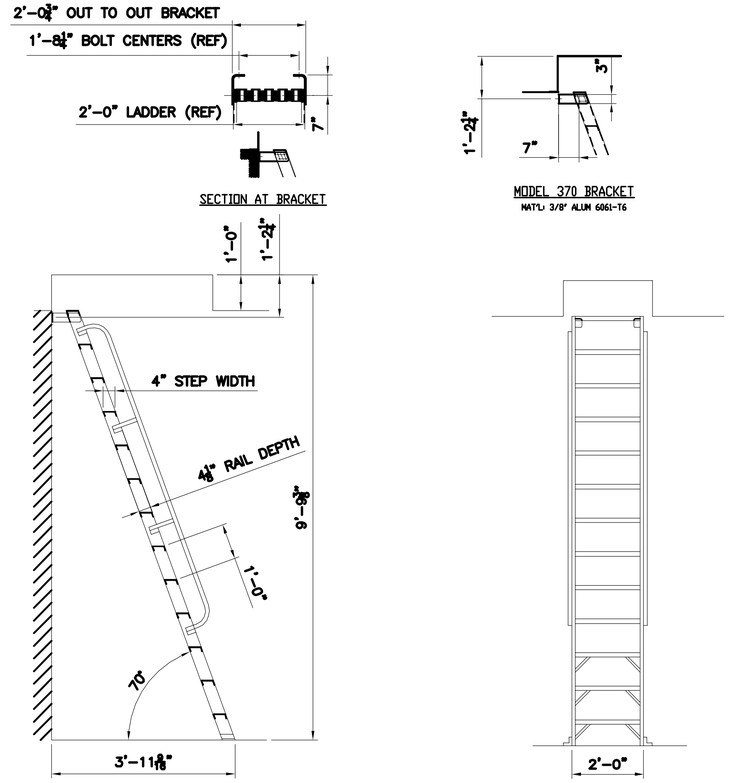

4 70° SHIPS LADDER DETAIL

Drawing Copyright © 2015

CHA
6 Campus Drive
Parsippany, NJ 07054-4406
973.539.2125 · www.chacompanies.com

PETER L. LILHOLT, JR.
PROFESSIONAL ENGINEER N.J. LIC.
24GE04894200

IT IS A VIOLATION OF LAW FOR ANY PERSON, UNLESS THEY ARE ACTING UNDER THE DIRECTION OF A LICENSED PROFESSIONAL ENGINEER, ARCHITECT, LANDSCAPE ARCHITECT OR LAND SURVEYOR TO ALTER AN ITEM IN ANY WAY. IF AN ITEM BEARING THE STAMP OF A LICENSED PROFESSIONAL ENGINEER, LANDSCAPE ARCHITECT, ARCHITECT OR LAND SURVEYOR SHALL STAMP THE DOCUMENT AND INCLUDE THE NOTATION "ALTERED BY" FOLLOWED BY THEIR SIGNATURE, THE DATE OF SUCH ALTERATION, AND A SPECIFIC DESCRIPTION OF THE ALTERATION.

PIONEERS

WILLIAM PATERSON UNIVERSITY

SOCCER FIELD IMPROVEMENTS

300 POMPTON RD.
WAYNE, NJ 07470

No.	Submittal / Revision	App'd.	By	Date
1	CONSTRUCTION DOCUMENTS	DD	MD	01/11/16

PRESS BOX

Designed By:	Drawn By:	Checked By:
MD	MD	DD
Issue Date: 01/11/2016	Project No: 30059	Scale:

Drawing No.:
C-412

File: V:\PROJECTS\ANY\K4\30059\CADD_ACAD\C410-414-30059.DWG
Saved: 1/7/2016 3:03:02 PM Plotted: 1/13/2016 1:39:03 PM Current User: Merklein, Tim LastSavedBy: 3512

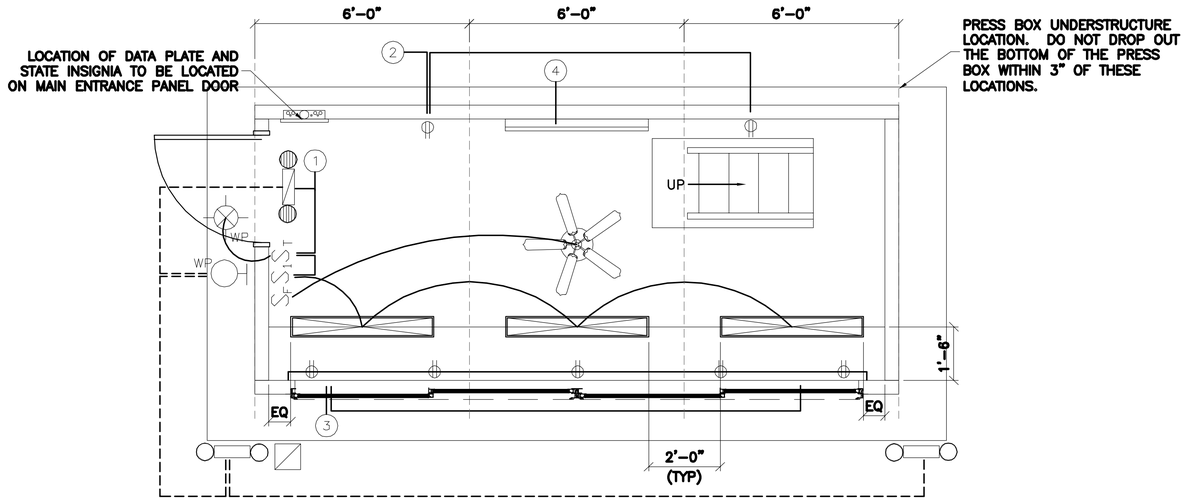

ELECTRICAL PLAN

SCALE: 1/2"=1'-0"

NOTES:

1) THE UTILITY METER BASE & FEEDER SYSTEM TO BE PROVIDED BY OTHERS ON SITE, UNDER THE AUTHORITY OF THE LOCAL JURISDICTIONS.
2) CONNECTION OF ELECTRICAL SERVICE TO BE PERFORMED BY A LICENSED ELECTRICIAN. (BY OTHERS)
3) ALL NUMBERS ON ELECTRICAL CIRCUITS DESIGNATE FEED SIDE OF CIRCUIT.
4) ALL BRANCH CIRCUIT WIRING TO BE ENCASED IN THIN WALL EMT CONDUIT–MIN 12 THHN WIRE

No	AMP	VOLT	WIRE	DESCRIPTION	WATTS
1	20	120	12 THHN	GENERAL LIGHTING	420
2	20	120	12 THHN	GENERAL RECEPTS	180
3	20	120	12 THHN	PLUG STRIPS	1,440
4	20	240	12 THHN	BASEBOARD HEATER	1,000
					3,040

12 AMPS @ 240 VOLTS

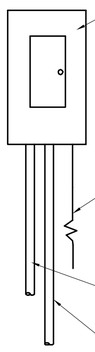

PANEL ELEVATION

SCALE: NTS

SYMBOL	DESCRIPTION
	LITHONIA #M–232–PC1S–120–GEB (2) 4' TUBE FLUORESCENT LIGHT WITH PARABOLIC DIFFUSERS (30 WATT)
	ELECTRICAL DISTRIBUTION LOAD CENTER W/ MAIN DISCONNECT–120/240V. SINGLE PHASE, 100 AMP CAPACITY, SQ. 'D' #Q0124M100 W/ (1) 1 1/2" CONDUIT THRU FLOOR––100 AMP CAPACITY W/ (1) 3/4" CONDUIT THRU FLOOR
S_1	PASS & SEYMOUR #870 SPEC. GRADE, GROUNDING TYPE, SWITCH
S_T	INTERMATIC #EI600 TIMER SWITCH
S_F	PASS & SEYMOUR #870 SPEC. GRADE, GROUNDING TYPE, SWITCH FOR LOW PROFILE CEILING FAN.
	LITHONIA #ECR SW3R120 EMERGENCY COMBINATION EXIT/FLOOD LIGHT W/ MINIMUM 90 MIN. BATTERY BACK–UP (WALL MOUNT)
	PASS & SEYMOUR CR20 SPEC. GRADE, GROUNDING TYPE, RECEPT GFI WHERE NOTED UP 18" UNLESS NOTED OTHERWISE
	WIREMOLD #5400 SERIES ELECTRIC PLUG STRIPS W/ RECEPTS AND COMMUNICATION JACK COVERS 48" O.C. AND 3/4" CONDUIT THRU FLOOR AT END–UP 14"
WP	COOPER HALO #H7ICT W/ 300P TRIM SOFFIT CAN LIGHT FIXTURE
WP	LITHONIA #ELAN–NX–0806 REMOTE EMERGENCY LIGHT HEAD
	ROOF ELECTRICAL ACCESS– 2X4 WATERPROOF FASCIA MOUNTED JUNCTION BOX WITH 3/4" EMT CONDUIT TO ENTRANCE PANEL FOR (FUTURE USE) (WEATHER–RESISANT RECEPTACLES IN WEATHERPROOF ENCLOSURES TO BE INSTALLED ON GUARD RAILS BY EC)
	BERKO #BKOC2544W 4'–0" ELECTRIC BASEBOARD HEATER WITH THERMOSTAT
	LITHONIA #WLTU EMERGENCY FLOOD LIGHT W/ MINIMUM 90 MIN. BATTERY BACK–UP (FRONT FASCIA MOUNT)
	36" DIAMETER LOW PROFILE CEILING FAN.

Drawing Copyright © 2015

CHA
6 Campus Drive
Parsippany, NJ 07054-4406
973.539.2125 - www.chacompanies.com

PETER L. LILHOLT, JR.
PROFESSIONAL ENGINEER N.J. LIC.
24GE04894200

IT IS A VIOLATION OF LAW FOR ANY PERSON, UNLESS THEY ARE ACTING UNDER THE DIRECTION OF A LICENSED PROFESSIONAL ENGINEER, ARCHITECT, LANDSCAPE ARCHITECT OR LAND SURVEYOR TO ALTER AN ITEM IN ANY WAY. IF AN ITEM BEARING THE STAMP OF A LICENSED PROFESSIONAL IS ALTERED, THE ALTERING ENGINEER, ARCHITECT, LANDSCAPE ARCHITECT OR LAND SURVEYOR SHALL STAMP THE DOCUMENT AND INCLUDE THE NOTATION "ALTERED BY" FOLLOWED BY THEIR SIGNATURE, THE DATE OF SUCH ALTERATION, AND A SPECIFIC DESCRIPTION OF THE ALTERATION.

PIONEERS

WILLIAM PATERSON UNIVERSITY

SOCCER FIELD IMPROVEMENTS

300 POMPTON RD.
WAYNE, NJ 07470

No.	Submittal / Revision	App'd.	By	Date
1	CONSTRUCTION DOCUMENTS	DD	MD	01/11/16

PRESS BOX

Designed By:	Drawn By:	Checked By:
MD	MD	DD
Issue Date: 01/11/2016	Project No: 30059	Scale:

Drawing No.:

C-413

File: V:\PROJECTS\ANY\X4\30059\CADD_ACAD\C410-414-30059.DWG
Saved: 1/7/2016 3:03:02 PM Plotted: 1/13/2016 1:39:24 PM Current User: Merklein, Tim LastSavedBy: 3512

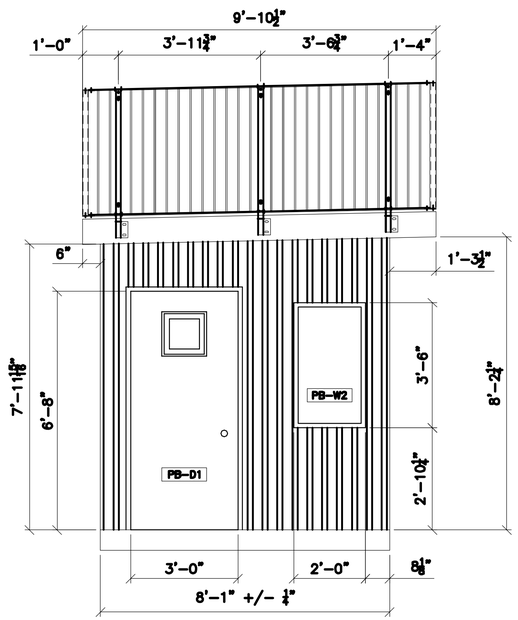

1 SIDE ELEVATION

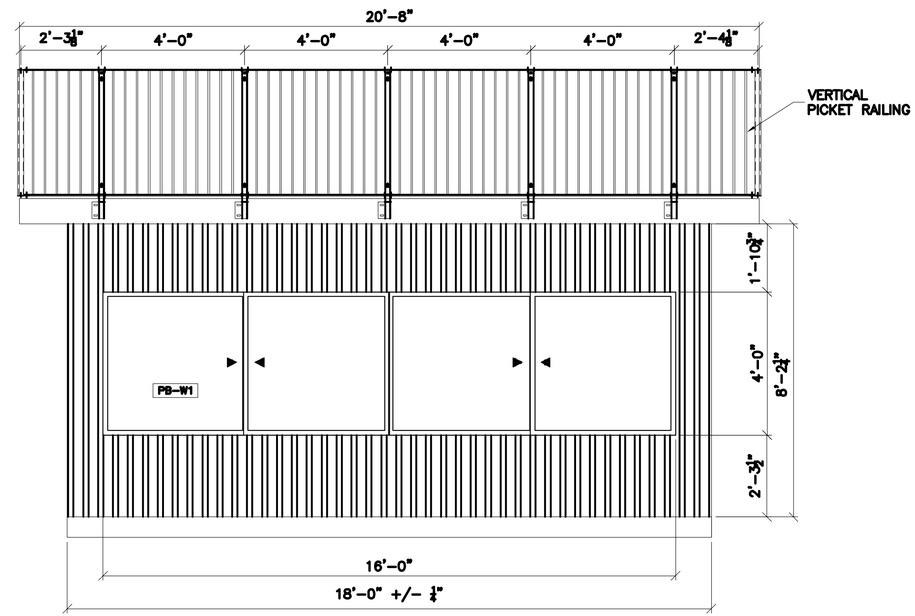

1 FRONT ELEVATION

DOOR SCHEDULE

DOOR						FRAME	
KEY	WIDTH	HEIGHT	THICKNESS	TYPE	MATERIAL	MATERIAL	FIRE RATING
PB-D1	3'-0"	6'-8"	0'-1¾"	3	STEEL	STEEL	

PB-D1 – INSULATED VINYL-FACED STEEL CLAD W/ STEEL JAMBS; 16" INSULATED/TEMPERED LITE, ALUMINUM THRESHOLD, VINYL WEATHER STOPS, STAINLESS STEEL HINGES AND HEAVY-DUTY RETENTION CHAINS. DOORS EQUIPPED WITH COMMERCIAL LEVER-HANDLED KEYED LOCKSETS.

*NOTE – DOORS INSTALLED PER MANUFACTURERS INSTALLATION DETAILS

WINDOW SCHEDULE

KEY	WIDTH	HEIGHT	TYPE	FRAME	U-FACTOR	SHGC
PB-W1	16'-0"	4'-0"	DOUBLE SLIDER	VINYL	.34	.27
PB-W2	2'-0"	3'-6"	FIXED	VINYL	.34	.27

PB-W1 – THV #7000 SERIES "PARAGON", DOUBLE HORIZONTAL SLIDER WINDOWS W/ EXTRUDED VINYL FRAMES, AAMA LC-25 STRUCTURAL RATING, W/ ¾" INSULATED LOW-E, ARGON FILLED TEMPERED GLASS W/ REMOVABLE INSECT SCREENS. NATURAL LIGHT ALLOWED = 64 SQ/FT, VENTABLE AREA = 32 SQ/FT

PB-W2 – THV #7000 SERIES "PARAGON", FIXED FRAME PICTURE WINDOW W/ EXTRUDED VINYL FRAMES, AAMA LC-25 STRUCTURAL RATING, W/ ¾" INSULATED LOW-E, ARGON FILLED TEMPERED GLASS. NATURAL LIGHT ALLOWED = 7 SQ/FT

*NOTE – GLAZING DESIGN PRESSURE = 22 PSF MINIMUM
WINDOWS INSTALLED PER MANUFACTURERS INSTALLATION DETAILS

Drawing Copyright © 2015

CHA
6 Campus Drive
Parsippany, NJ 07054-4406
973.538.2325 - www.chacompanies.com

PETER L. LILHOLT, JR.
PROFESSIONAL ENGINEER N.J. LIC.
24GE04894200

IT IS A VIOLATION OF LAW FOR ANY PERSON, UNLESS THEY ARE ACTING UNDER THE DIRECTION OF A LICENSED PROFESSIONAL ENGINEER, ARCHITECT, LANDSCAPE ARCHITECT OR LAND SURVEYOR TO ALTER AN ITEM IN ANY WAY. IF AN ITEM BEARING THE STAMP OF A LICENSED PROFESSIONAL IS ALTERED, THE ALTERING ENGINEER, ARCHITECT, LANDSCAPE ARCHITECT OR LAND SURVEYOR SHALL STAMP THE DOCUMENT AND INCLUDE THE NOTATION "ALTERED BY" FOLLOWED BY THEIR SIGNATURE, THE DATE OF SUCH ALTERATION, AND A SPECIFIC DESCRIPTION OF THE ALTERATION.

PIONEERS

WILLIAM PATERSON UNIVERSITY

SOCCER FIELD IMPROVEMENTS

300 POMPTON RD.
WAYNE, NJ 07470

No.	Submittal / Revision	App'd.	By	Date
1	CONSTRUCTION DOCUMENTS	DD	MD	01/11/16

PRESS BOX

Designed By:	Drawn By:	Checked By:
MD	MD	DD
Issue Date: 01/11/2016	Project No: 30059	Scale:

Drawing No.:
C-414

File: V:\PROJECTS\ANY\K4\30059\CADD_ACAD\C410-414-30059.DWG
Saved: 1/7/2016 3:03:02 PM Plotted: 1/13/2016 1:39:42 PM Current User: Merklein, Tim LastSavedBy: 3512

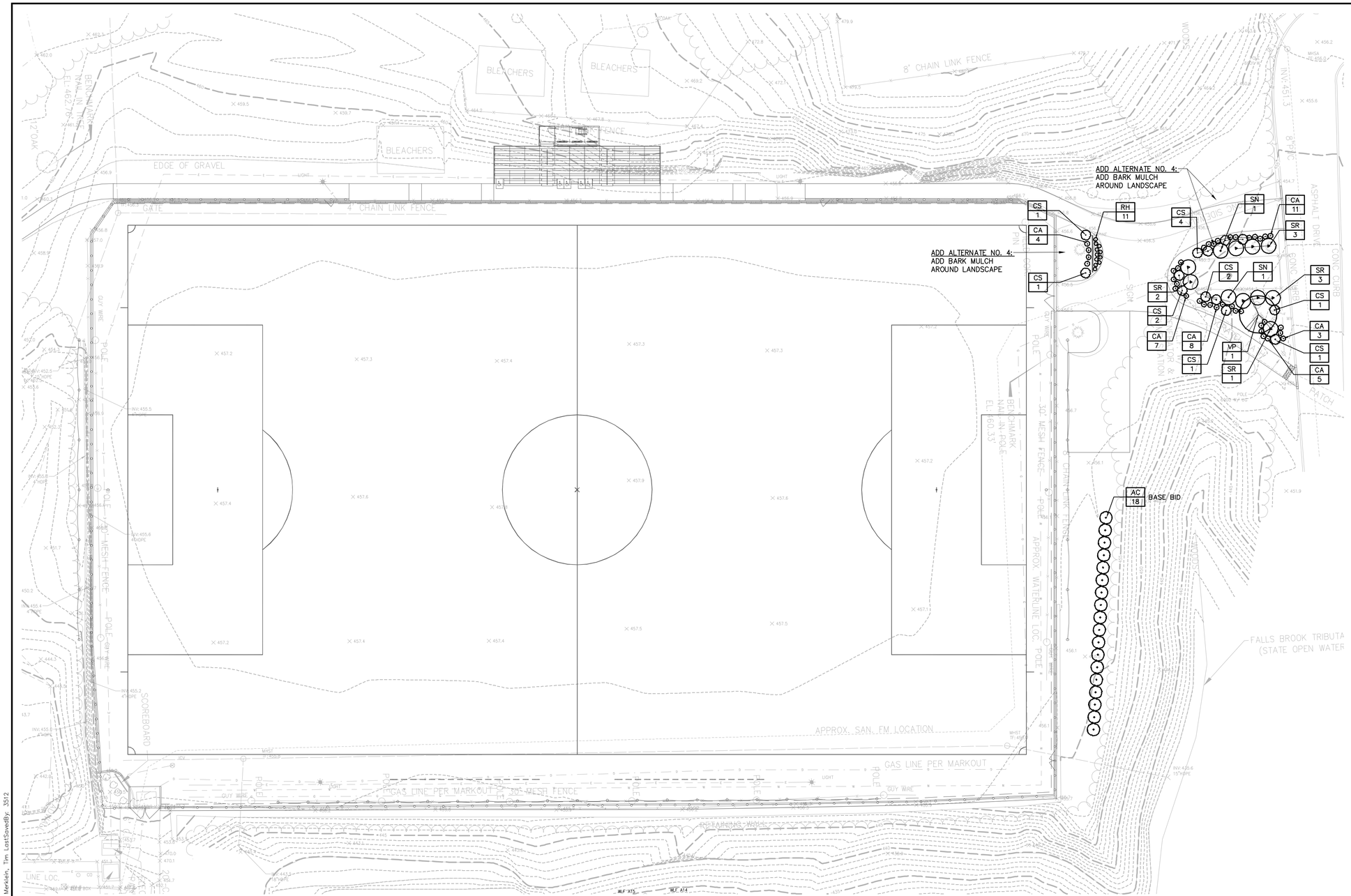

LEGEND

ORNAMENTAL TREE

LARGE/MEDIUM SHRUB

SMALL SHRUB

NOTES:

1. LANDSCAPE MATERIAL IS PART OF ADD ALTERNATE NO. 4 UNLESS OTHERWISE NOTED ON PLAN.
2. ALL DISTURBED AREAS OF THE SITE WHICH ARE NOT STABILIZED BY SOD, MULCHED, PAVED, ETC. SHALL BE TOPSOILED, SEEDED AND MULCHED. APPROVED TOPSOIL TO BE INSTALLED TO A MINIMUM 6" DEPTH. COORDINATE WITH SITE EROSION CONTROL PLAN FOR ALL APPROVED STABILIZATION METHODS THROUGHOUT CONSTRUCTION ACTIVITY.
3. THE CONTRACTOR SHALL VERIFY FINAL LOCATION OF PLANT MATERIAL WITH THE LANDSCAPE ARCHITECT PRIOR TO INSTALLATION PER THE SPECIFICATIONS.
4. PLANTING SOIL SHALL BE PLACED IN ALL PANTING BEDS PRIOR TO PLANTING.
5. SEE SHEET C-608 FOR LANDSCAPE PLANTING DETAILS.

BASE BID – PLANTING SCHEDULE

#	KEY	BOTANICAL NAME	COMMON NAME	SIZE	ROOT	SPACING	REMARKS	COMMENTS
SHRUBS, GRASSES, PERENNIALS & GROUNDCOVER								
18	AC	Amelanchier canadensis	Serviceberry	5 GAL.	CONTAINER	5' O.C.		MULTI-STEM SHRUB FORM

ADD ALTERNATE NO. 4 – PLANTING SCHEDULE

#	KEY	BOTANICAL NAME	COMMON NAME	SIZE	ROOT	SPACING	REMARKS	COMMENTS
SHRUBS, GRASSES, PERENNIALS & GROUNDCOVER								
40	CA	Ceanothus americanus	New Jersey Tea	5 GAL.	CONTAINER	AS SHOWN		
13	CS	Cornus sericea 'Farrow'	Redosier Dogwood	5 GAL.	CONTAINER	AS SHOWN		
11	RH	Rudbeckia hirta	Black Eyed Susan	1 GAL.	CONTAINER	AS SHOWN		
2	SN	Sambucus nigra 'Black Lace'	Black Lace Elderberry	5 GAL.	CONTAINER	AS SHOWN		
9	SR	Sambucus racemosa 'Lemony Lace'	Lemony Lace Elderberry	5 GAL.	CONTAINER	AS SHOWN		
1	VP	Viburnum prunifolium	Blackhaw Viburnum	1.5" CAL.	B & B	AS SHOWN		

0 20' 40'
Scale in feet

Drawing Copyright © 2015

CHA
6 Campus Drive
Parsippany, NJ 07054-4406
973.538.2325 - www.chacompanies.com

PETER L. LILHOLT, JR.
PROFESSIONAL ENGINEER N.J. LIC.
24GE04894200

IT IS A VIOLATION OF LAW FOR ANY PERSON, UNLESS THEY ARE ACTING UNDER THE DIRECTION OF A LICENSED PROFESSIONAL ENGINEER, ARCHITECT, LANDSCAPE ARCHITECT OR LAND SURVEYOR TO ALTER AN ITEM IN ANY WAY. IF AN ITEM BEARING THE STAMP OF A LICENSED PROFESSIONAL IS ALTERED, THE ALTERING ENGINEER, ARCHITECT, LANDSCAPE ARCHITECT OR LAND SURVEYOR SHALL STAMP THE DOCUMENT AND INCLUDE THE NOTATION "ALTERED BY" FOLLOWED BY THEIR SIGNATURE, THE DATE OF SUCH ALTERATION, AND A SPECIFIC DESCRIPTION OF THE ALTERATION.

PIONEERS

WILLIAM PATERSON UNIVERSITY

SOCCER FIELD IMPROVEMENTS

300 POMPTON RD.
WAYNE, NJ 07470

No.	Submittal / Revision	App'd.	By	Date
1	CONSTRUCTION DOCUMENTS	DD	TM	01/11/16

SITE LANDSCAPE PLAN

Designed By:	Drawn By:	Checked By:
TM	TM	DD
Issue Date: 01/11/2016	Project No: 30059	Scale: AS SHOWN

Drawing No.:
C-501

File: V:\PROJECTS\ANY\K4\30059\CADD_ACAD\C501-30059.DWG
Saved: 1/13/2016 12:28:32 PM Plotted: 1/13/2016 1:41:20 PM Current User: Merklein, Tim LastSavedBy: 3512

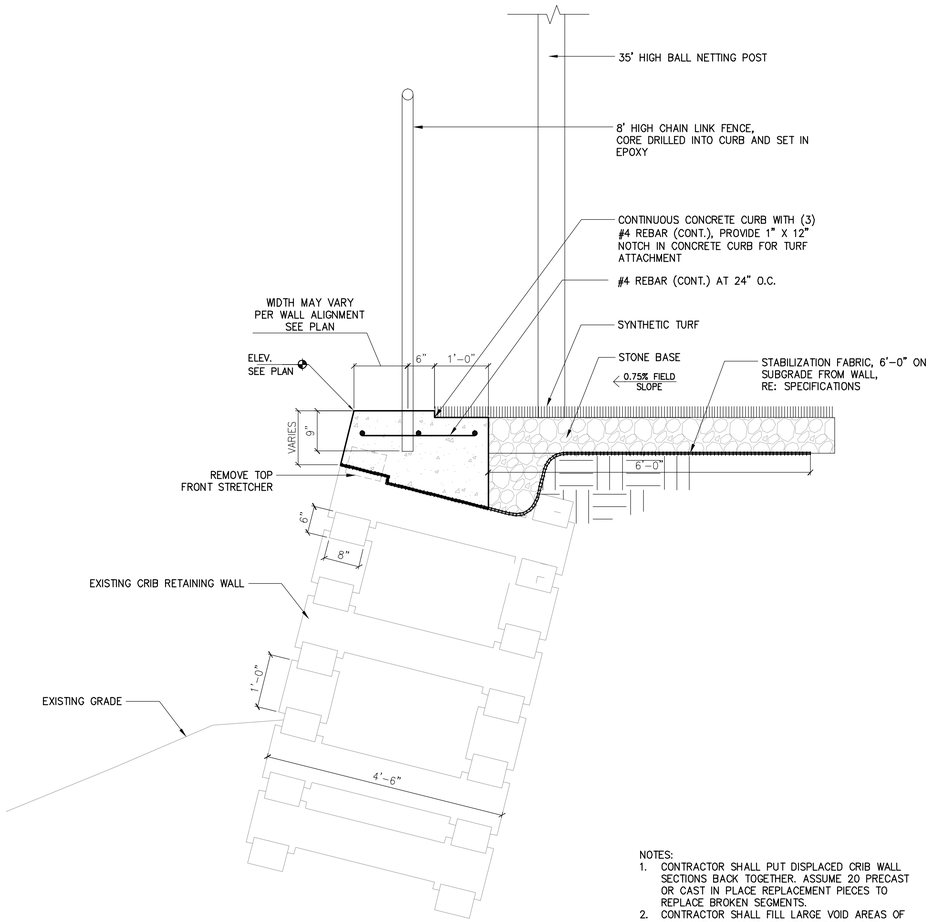

NOTES:
1. CONTRACTOR SHALL PUT DISPLACED CRIB WALL SECTIONS BACK TOGETHER. ASSUME 20 PRECAST OR CAST IN PLACE REPLACEMENT PIECES TO REPLACE BROKEN SEGMENTS.
2. CONTRACTOR SHALL FILL LARGE VOID AREAS OF WALL WITH 6" CRUSHED STONE BELOW THE STABILIZATION FABRIC.

3 CRIB WALL FIELD CURB SECTION AT EAST SIDE LINE
SECTION SCALE: 3/4" = 1'-0"

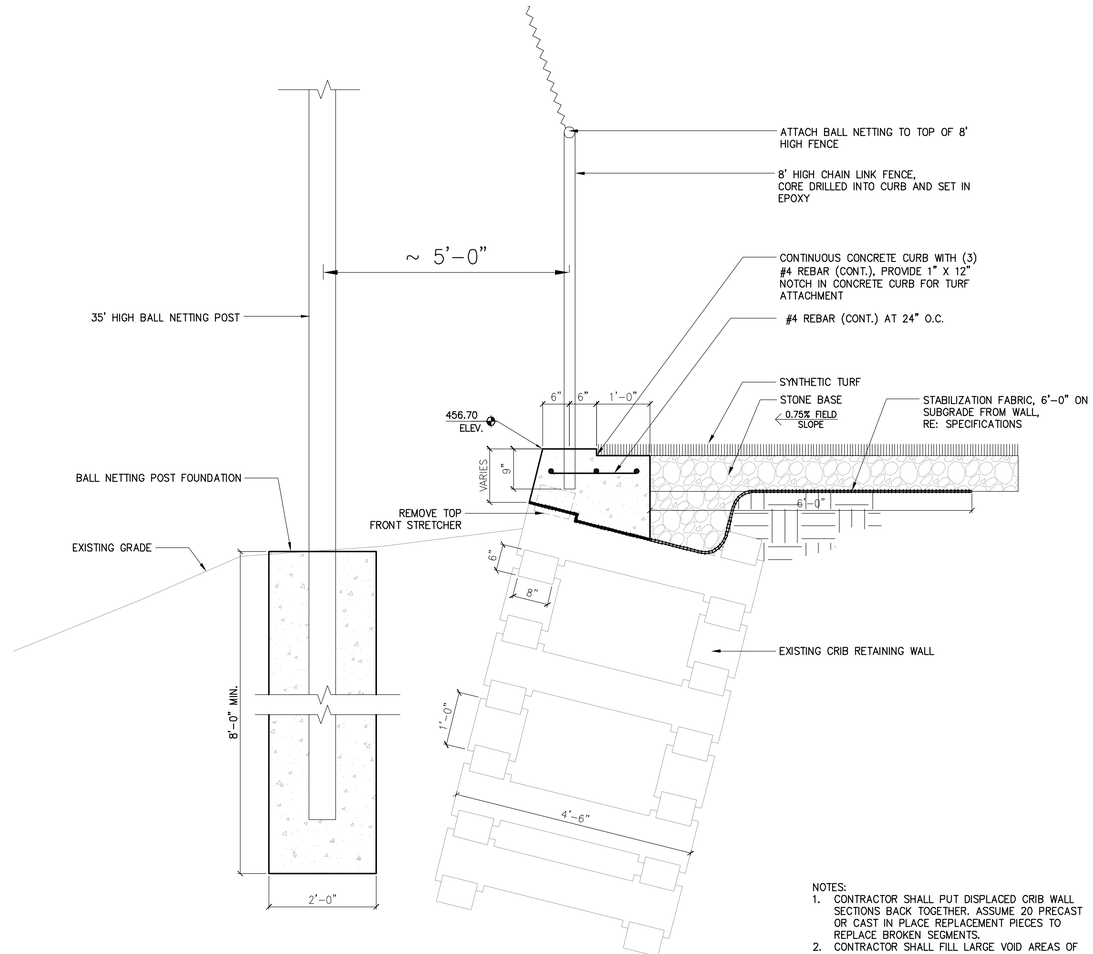

NOTES:
1. CONTRACTOR SHALL PUT DISPLACED CRIB WALL SECTIONS BACK TOGETHER. ASSUME 20 PRECAST OR CAST IN PLACE REPLACEMENT PIECES TO REPLACE BROKEN SEGMENTS.
2. CONTRACTOR SHALL FILL LARGE VOID AREAS OF WALL WITH 6" CRUSHED STONE BELOW THE STABILIZATION FABRIC.

2 CRIB WALL FIELD CURB SECTION AT NORTH AND SOUTH END LINES
SECTION SCALE: 3/4" = 1'-0"

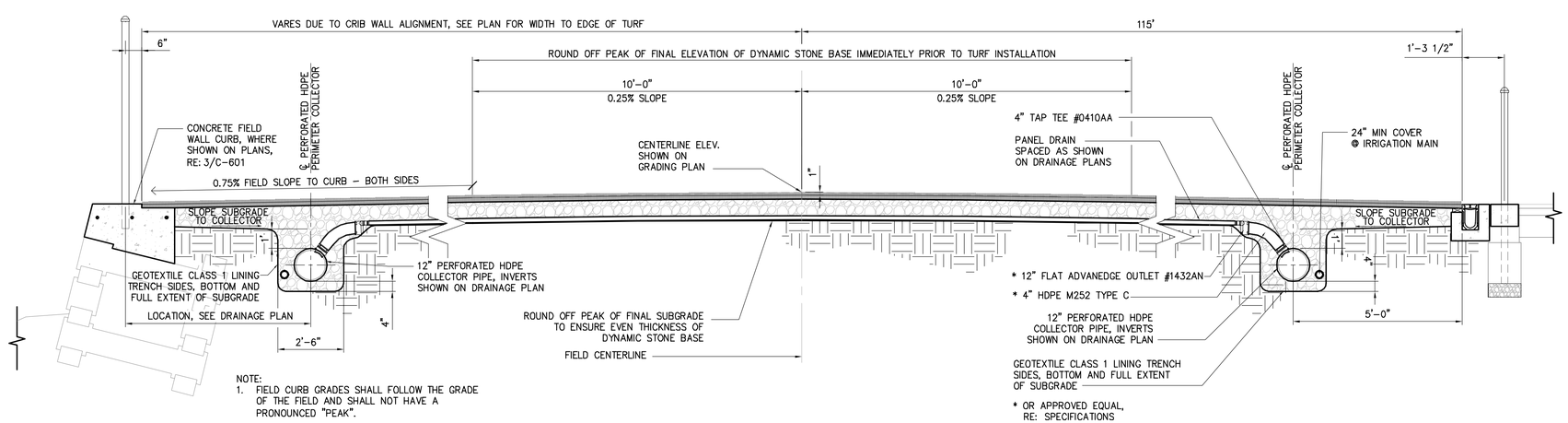

NOTE:
1. FIELD CURB GRADES SHALL FOLLOW THE GRADE OF THE FIELD AND SHALL NOT HAVE A PRONOUNCED "PEAK".

1 FIELD SECTION
SECTION SCALE: 1/2" = 1'-0"

Drawing Copyright © 2015

CHA
6 Campus Drive
Parsippany, NJ 07054-4406
973.538.2325 - www.chacompanies.com

PETER L. LILHOLT, JR.
PROFESSIONAL ENGINEER N.J. LIC.
24GE04894200

IT IS A VIOLATION OF LAW FOR ANY PERSON, UNLESS THEY ARE ACTING UNDER THE DIRECTION OF A LICENSED PROFESSIONAL ENGINEER, ARCHITECT, LANDSCAPE ARCHITECT OR LAND SURVEYOR TO ALTER AN ITEM IN ANY WAY. IF AN ITEM BEARING THE STAMP OF A LICENSED PROFESSIONAL IS ALTERED, THE ALTERING ENGINEER, ARCHITECT, LANDSCAPE ARCHITECT OR LAND SURVEYOR SHALL STAMP THE DOCUMENT AND INCLUDE THE NOTATION "ALTERED BY" FOLLOWED BY THEIR SIGNATURE, THE DATE OF SUCH ALTERATION, AND A SPECIFIC DESCRIPTION OF THE ALTERATION.

PIONEERS

WILLIAM PATERSON UNIVERSITY

SOCCER FIELD IMPROVEMENTS

300 POMPTON RD.
WAYNE, NJ 07470

No.	Submittal / Revision	App'd.	By	Date
1	CONSTRUCTION DOCUMENTS	DD	TM	01/11/16

SITE DETAILS

Designed By:	Drawn By:	Checked By:
WM	TM	DD
Issue Date: 01/11/2016	Project No: 30059	Scale: AS SHOWN

Drawing No.:
C-601

File: V:\PROJECTS\ANY\K4\30059\CADD_ACAD\C601-C606-30059.DWG
Saved: 1/8/2016 9:07:54 AM Plotted: 1/13/2016 1:46:45 PM Current User: Merklein, Tim LastSavedBy: 3512

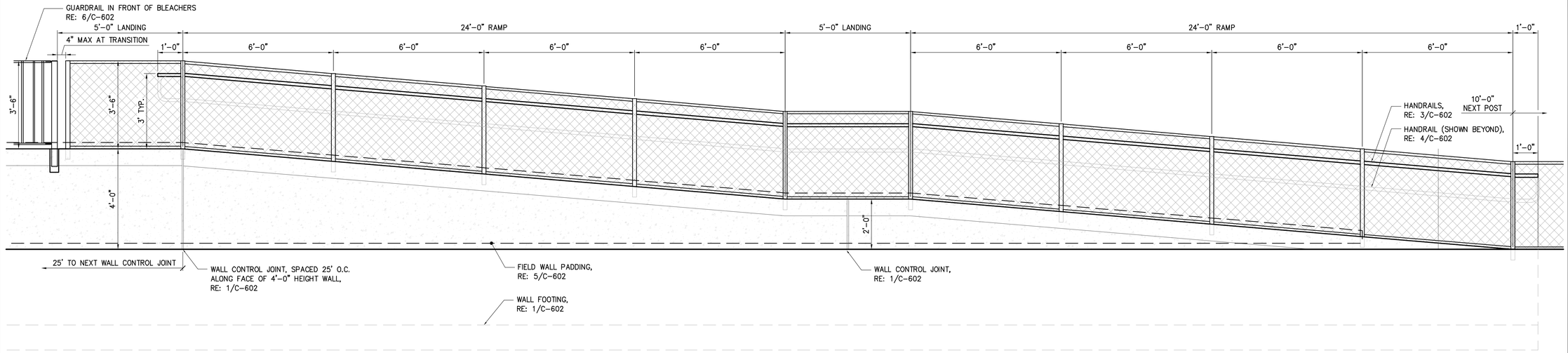

2 TYPICAL RAMP ELEVATION

ELEVATION — SCALE: 1/2" = 1'-0"

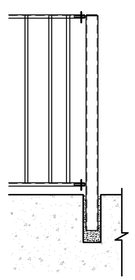

NOTES:

1) ALL PICKET RAILING PANELS ARE CONSTRUCTED WITH 1 1/2" x 1/2" STEEL CHANNEL FOR THE TOP & BOTTOM RAIL & 1/2" SQUARE BAR FOR THE PICKETS. THE PICKETS HAVE A TYPICAL SPACING OF 4" ON CENTER.

2) THE POSTS FOR THE PICKET RAILING ARE CONSTRUCTED OF 2" X 2" X 3/16" STEEL SQUARE TUBING.

3) THE TOP & BOTTOM RAIL OF EACH PICKET RAIL PANEL ATTACHES TO A CLIP ON THE POST WITH A 3/8"ø X 1" CARRIAGE BOLT, HEX NUT & FLAT WASHER

4) CORE-DRILLED POST ARE TYPICALLY 3"ø, 6" DEEP.

6 GUARDRAIL

ELEVATION — SCALE: 1" = 1'-0"

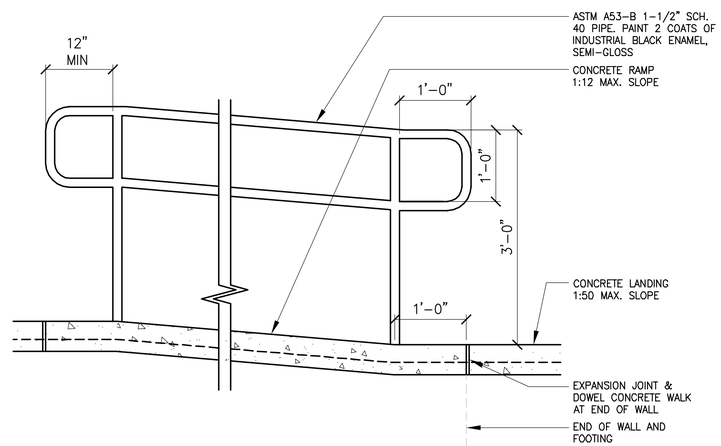

4 HANDRAIL ELEVATION AT RAMP

ELEVATION — SCALE: 1" = 1'-0"

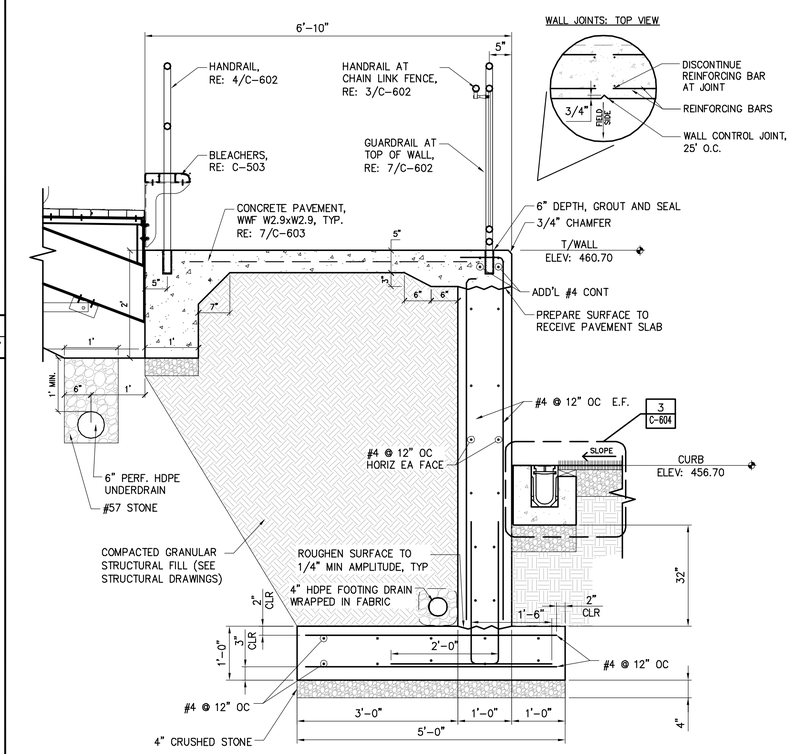

1 RAMP AND WALL SECTION AT GRANDSTAND

SECTION — SCALE: 3/4" = 1'-0"

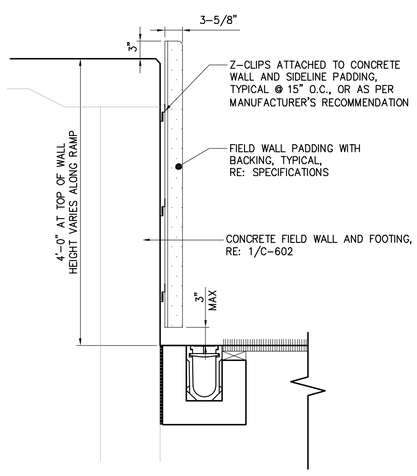

5 FIELD WALL PADDING

SECTION — SCALE: 1" = 1'-0"

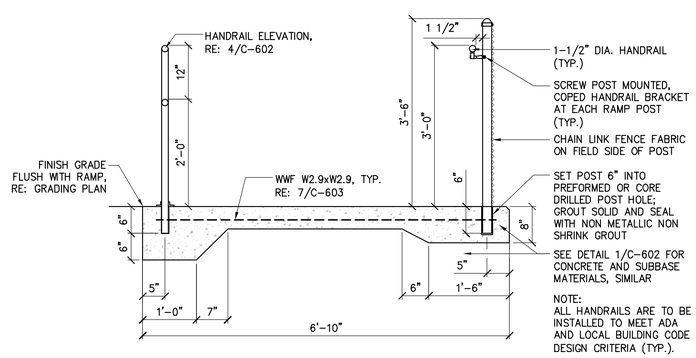

NOTE:
ALL HANDRAILS ARE TO BE INSTALLED TO MEET ADA AND LOCAL BUILDING CODE DESIGN CRITERIA (TYP.).

3 HANDRAILS AT RAMP

SECTION — SCALE: 3/4" = 1'-0"

Drawing Copyright © 2015

CHA
6 Campus Drive
Parsippany, NJ 07054-4406
973.539.3125 · www.chacompanies.com

PETER L. LILHOLT, JR.
PROFESSIONAL ENGINEER N.J. LIC.
24GE04894200

IT IS A VIOLATION OF LAW FOR ANY PERSON, UNLESS THEY ARE ACTING UNDER THE DIRECTION OF A LICENSED PROFESSIONAL ENGINEER, ARCHITECT, LANDSCAPE ARCHITECT OR LAND SURVEYOR TO ALTER AN ITEM IN ANY WAY. IF AN ITEM BEARING THE STAMP OF A LICENSED PROFESSIONAL IS ALTERED, THE ALTERING ENGINEER, ARCHITECT, LANDSCAPE ARCHITECT OR LAND SURVEYOR SHALL AFFIX TO THE ITEM THE PHRASE "ALTERED BY" FOLLOWED BY THEIR SIGNATURE, THE DATE OF SUCH ALTERATION, AND A SPECIFIC DESCRIPTION OF THE ALTERATION.

PIONEERS

WILLIAM PATERSON UNIVERSITY

SOCCER FIELD IMPROVEMENTS

300 POMPTON RD.
WAYNE, NJ 07470

No.	Submittal / Revision	App'd.	By	Date
1	CONSTRUCTION DOCUMENTS	DD	TM	01/11/16

SITE DETAILS

Designed By:	Drawn By:	Checked By:
WM	TM	DD
Issue Date:	Project No:	Scale:
01/11/2016	30059	AS SHOWN

Drawing No.:
C-602

File: V:\PROJECTS\ANY\K4\30059\CADD_ACAD\C601-C606-30059.DWG
Saved: 1/8/2016 9:07:34 AM Plotted: 1/13/2016 1:47:07 PM Current User: Merklein, Tim LastSavedBy: 3512

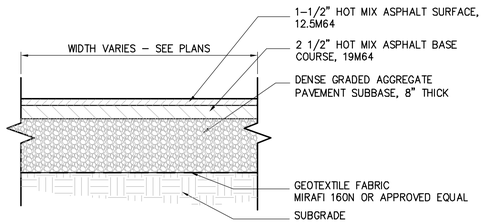

9 ASPHALT PAVEMENT
SECTION — SCALE: N.T.S.

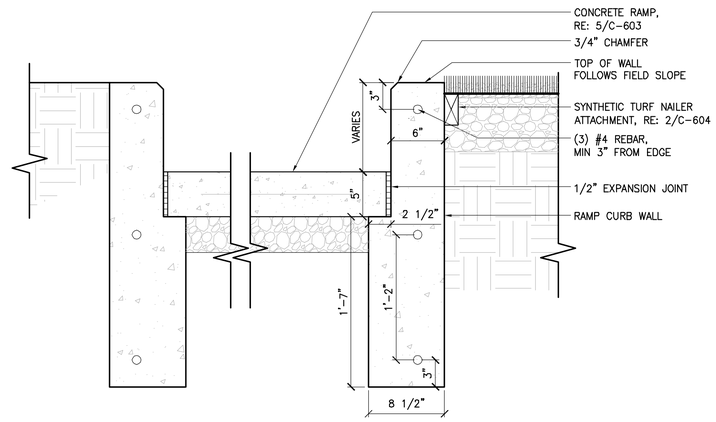

6 CONCRETE RAMP AT SOUTH–EAST CORNER
NORTH/SOUTH SECTION — SCALE: 1–1/2" = 1'–0"

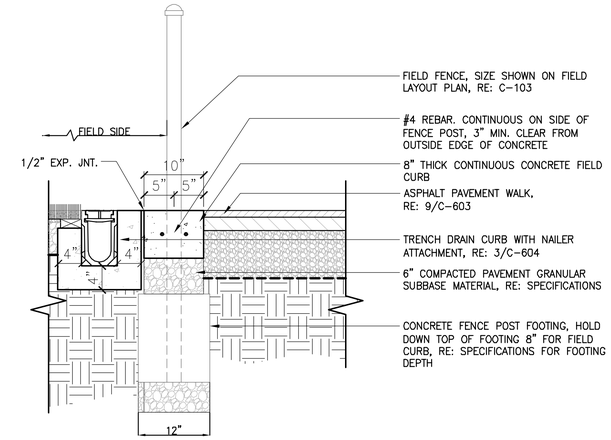

3 FIELD CURB AT CHANNEL DRAIN (WEST SIDE LINE)
SECTION — SCALE: 1" = 1'–0"

EXPANSION JOINTS TO OCCUR 25' O.C. MAX & AT ALL CURBS, WALLS, & VERT. ELEMENTS, AND AS SHOWN ON PLANS

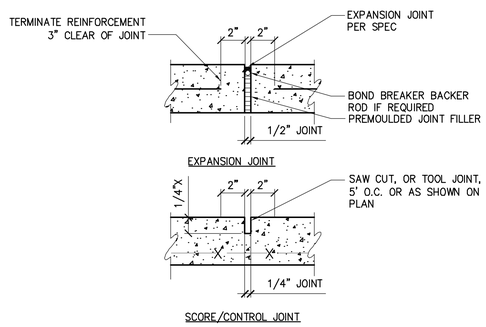

8 CONCRETE JOINTS
SECTION — SCALE: N.T.S.

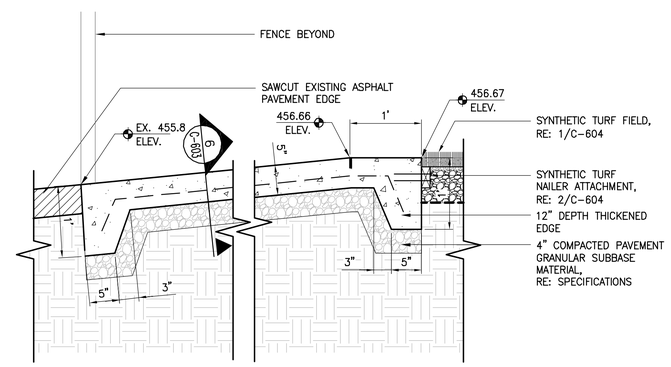

5 CONCRETE RAMP AT SOUTH–EAST CORNER
EAST/WEST SECTION — SCALE: 1" = 1'–0"

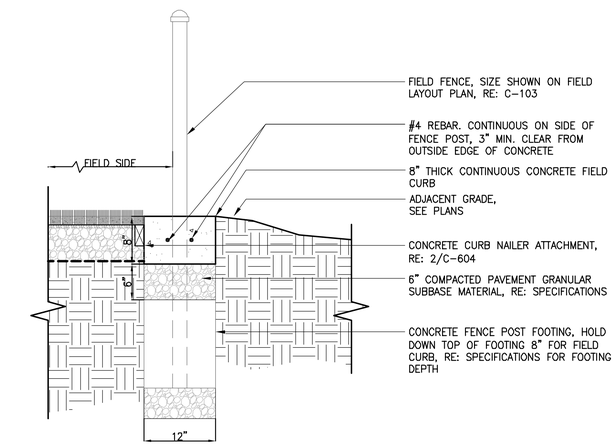

2 FIELD CURB
SECTION — SCALE: 1" = 1'–0"

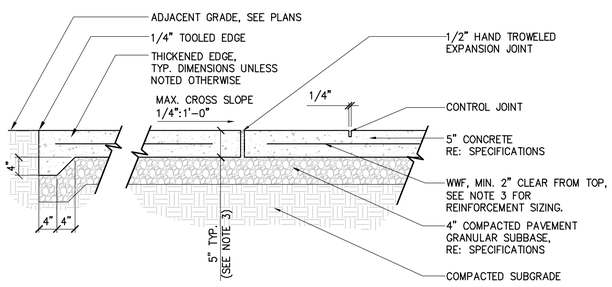

NOTES:
1. MED. BROOM FINISH PERPENDICULAR TO TRAFFIC PATTERN.
2. NO BANDING (OVERSTRIKE) AT JOINT OR EDGE.
3. PROVIDE 6/6 W2.9 x W2.9 AT 5" THICK CONCRETE.

7 CONCRETE PAVEMENT
SECTION — SCALE: 3/4" = 1'–0"

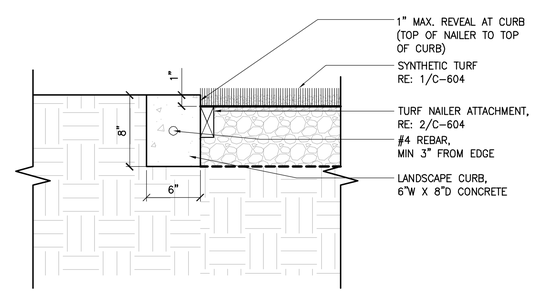

4 LANDSCAPE CURB (SCOREBOARD AREA)
SECTION — SCALE: 1" = 1'–0"

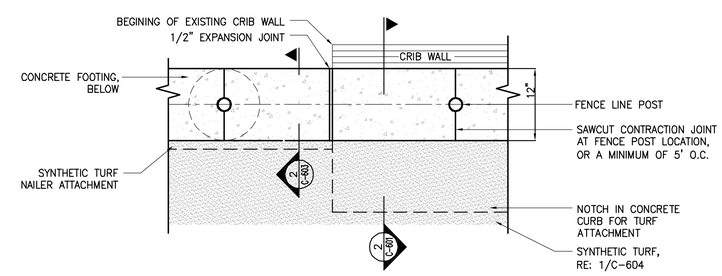

1 FIELD CURB TRANSITION AT END OF CRIB WALL
SECTION — SCALE: 1" = 1'–0"

Drawing Copyright © 2015

CHA
6 Campus Drive
Parsippany, NJ 07054-4406
973.538.2325 · www.chacompanies.com

PETER L. LILHOLT, JR.
PROFESSIONAL ENGINEER N.J. LIC.
24GE04894200

IT IS A VIOLATION OF LAW FOR ANY PERSON, UNLESS THEY ARE ACTING UNDER THE DIRECTION OF A LICENSED PROFESSIONAL ENGINEER, ARCHITECT, LANDSCAPE ARCHITECT OR LAND SURVEYOR TO ALTER AN ITEM IN ANY WAY. IF AN ITEM BEARING THE STAMP OF A LICENSED PROFESSIONAL IS ALTERED, THE ALTERING ENGINEER, ARCHITECT, LANDSCAPE ARCHITECT OR LAND SURVEYOR SHALL STAMP THE DOCUMENT AND INCLUDE THE NOTATION "ALTERED BY" FOLLOWED BY THEIR SIGNATURE, THE DATE OF SUCH ALTERATION, AND A SPECIFIC DESCRIPTION OF THE ALTERATION.

PIONEERS

WILLIAM PATERSON UNIVERSITY

SOCCER FIELD IMPROVEMENTS

300 POMPTON RD.
WAYNE, NJ 07470

No.	Submittal / Revision	App'd.	By	Date
1	CONSTRUCTION DOCUMENTS	DD	TM	01/11/16

SITE DETAILS

Designed By:	Drawn By:	Checked By:
WM	TM	DD
Issue Date: 01/11/2016	Project No: 30059	Scale: AS SHOWN

Drawing No.:
C-603

File: V:\PROJECTS\ANY\K4\30059\CADD_ACAD\C601-C606-30059.DWG
Saved: 1/8/2016 9:07:54 AM Plotted: 1/13/2016 1:47:32 PM Current User: Merkelin, Tim LastSavedBy: 3512

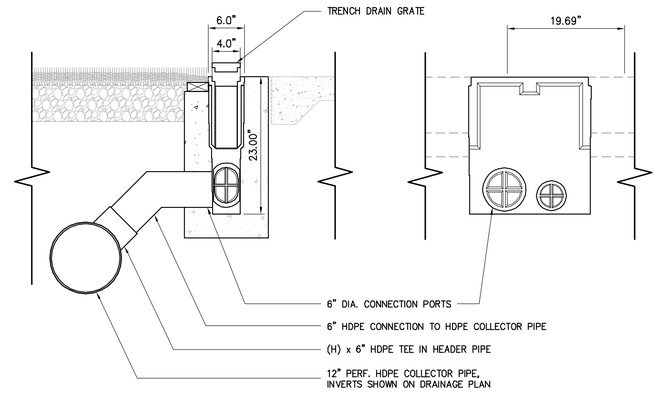

6 CHANNEL DRAIN CATCH BASIN

SECTION — SCALE: 1" = 1'-0"

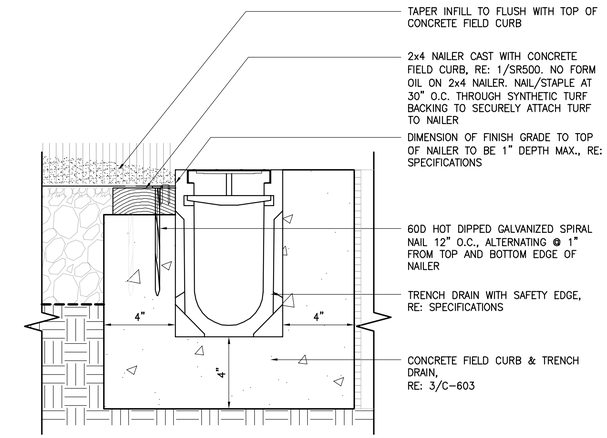

3 SYNTHETIC TURF NAILER ATTACHMENT AT CHANNEL DRAIN

SECTION — SCALE: 3" = 1'-0"

9 NOT USED

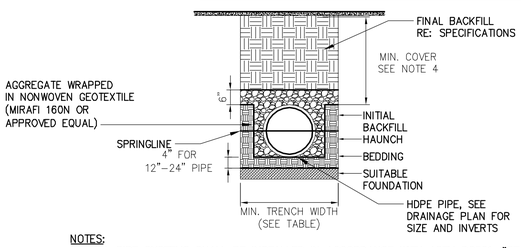

MINIMUM TRENCH WIDTHS

PIPE DIAM.	MIN. TRENCH WIDTH
4"	21"
6"	23"
12"	30"

NOTES:

1. ALL PIPE SYSTEMS SHALL BE INSTALLED IN ACCORDANCE WITH ASTM D2321, "STANDARD PRACTICE FOR UNDERGROUND INSTALLATION OF THERMOPLASTIC PIPE FOR SEWERS AND OTHER GRAVITY FLOW APPLICATIONS", LATEST ADDITION.
2. BEDDING: SUITABLE MATERIAL SHALL BE CLASS I, II OR III. THE CONTRACTOR SHALL PROVIDE DOCUMENTATION FOR MATERIAL SPECIFICATION TO ENGINEER. UNLESS OTHERWISE NOTED BY THE ENGINEER, MINIMUM BEDDING THICKNESS SHALL BE 4" FOR 4"-24".
3. INITIAL BACKFILL: SUITABLE MATERIAL SHALL BE CLASS I, II OR III IN THE PIPE ZONE EXTENDING NOT LESS THAN 6" ABOVE CROWN OF PIPE. THE CONTRACTOR SHALL PROVIDE DOCUMENTATION FOR MATERIAL SPECIFICATION TO ENGINEER. MATERIAL SHALL BE INSTALLED AS REQUIRED IN ASTM D2321, LATEST EDITION.
4. MINIMUM COVER: MINIMUM COVER, H, IN NON-TRAFFIC APPLICATIONS (GRASS OR LANDSCAPE AREAS) IS 12" FROM THE TOP OF PIPE TO GROUND SURFACE. ADDITIONAL COVER MAY BE REQUIRED TO PREVENT FLOATATION.
5. PERFORATED HDPE SHALL BE WRAPPED WITH FACTORY INSTALLED NONWOVEN GEOTEXTILE OR FILTER SOCK.

8 HDPE DRAINAGE TRENCH

SECTION — SCALE: N.T.S.

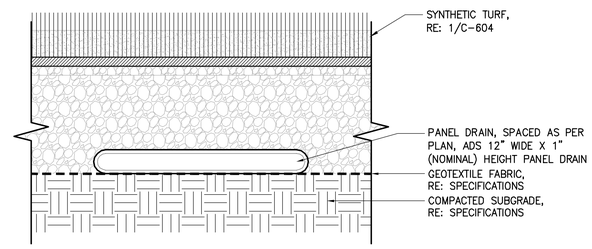

5 PANEL DRAIN

SECTION — SCALE: 3" = 1'-0"

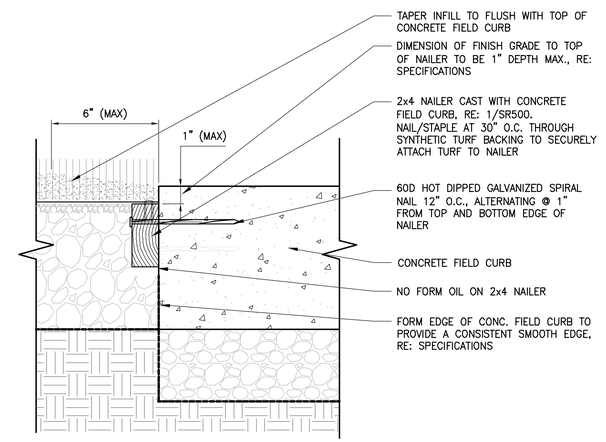

2 SYNTHETIC TURF NAILER ATTACHMENT

SECTION — SCALE: 3" = 1'-0"

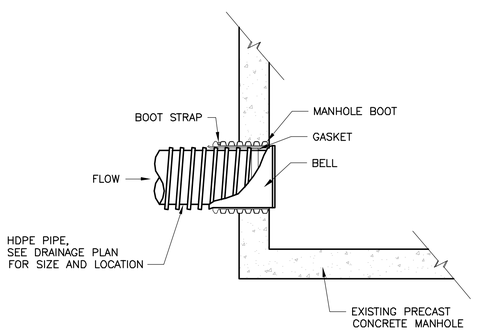

7 HDPE CONNECTION AT EXISTING STORM MANHOLE

SECTION — SCALE: N.T.S.

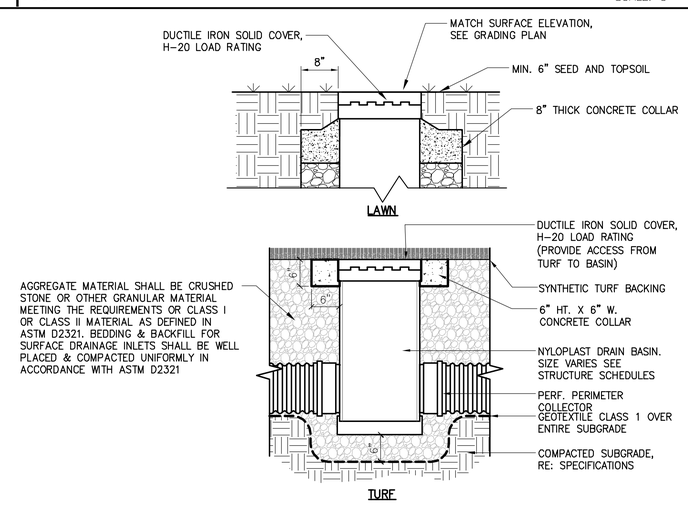

4 DRAIN BASIN CLEANOUT

SECTION — SCALE: 3/4" = 1'-0"

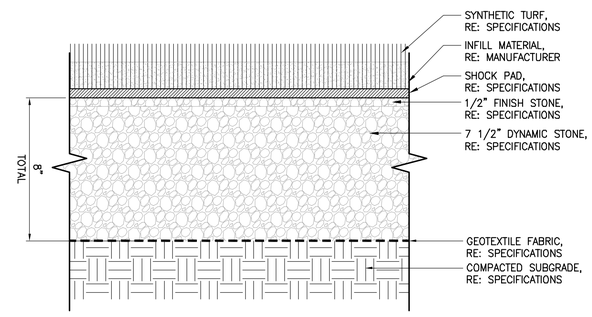

1 SYNTHETIC TURF

SECTION — SCALE: 3" = 1'-0"

Drawing Copyright © 2015

CHA
6 Campus Drive
Parsippany, NJ 07054-4406
973.538.2325 - www.chacompanies.com

PETER L. LILHOLT, JR.
PROFESSIONAL ENGINEER N.J. LIC.
24GE04894200

IT IS A VIOLATION OF LAW FOR ANY PERSON, UNLESS THEY ARE ACTING UNDER THE DIRECTION OF A LICENSED PROFESSIONAL ENGINEER, ARCHITECT, LANDSCAPE ARCHITECT OR LAND SURVEYOR, TO ALTER AN ITEM IN ANY WAY. IF AN ITEM BEARING THE STAMP OF A LICENSED PROFESSIONAL IS ALTERED, THE ALTERING ENGINEER, ARCHITECT, LANDSCAPE ARCHITECT OR LAND SURVEYOR SHALL STAMP THE DOCUMENT AND INCLUDE THE NOTATION "ALTERED BY" FOLLOWED BY THEIR SIGNATURE, THE DATE OF SUCH ALTERATION, AND A SPECIFIC DESCRIPTION OF THE ALTERATION.

PIONEERS

WILLIAM PATERSON UNIVERSITY

SOCCER FIELD IMPROVEMENTS

300 POMPTON RD.
WAYNE, NJ 07470

No.	Submittal / Revision	App'd.	By	Date
1	CONSTRUCTION DOCUMENTS	DD	TM	01/11/16

SITE DETAILS

Designed By:	Drawn By:	Checked By:
WM	TM	DD
Issue Date: 01/11/2016	Project No: 30059	Scale: AS SHOWN

Drawing No.:

C-604

File: V:\PROJECTS\ANY\X4\30059\CADD_ACAD\C601-C606-30059.DWG
Saved: 1/8/2016 9:07:54 AM Plotted: 1/13/2016 1:47:59 PM Current User: Merklein, Tim LastSavedBy: 3512

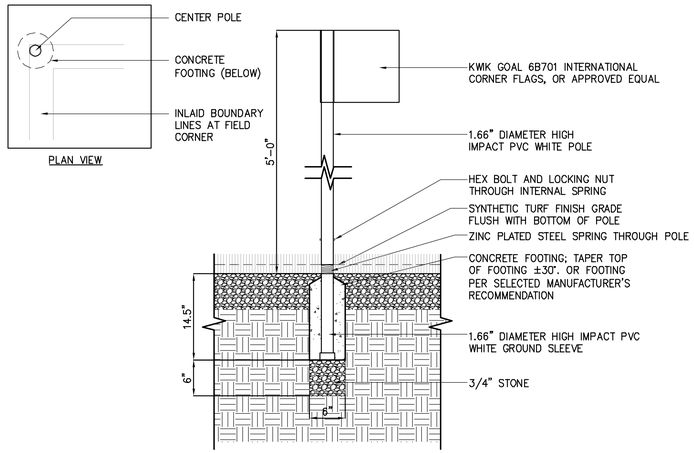

9 SOCCER CORNER FLAGS

SECTION — SCALE: 1" = 1'-0"

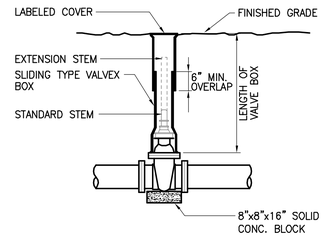

NOTES:

1. VALVE BOX COVERS SHALL BE CAST WITH AN ARROW POINTING TO THE DIRECTION OF THE OPENING AND THE WORD "OPEN RIGHT". BOX AND COVER SHALL BE TAR COATED. INSTALLATION OF EXTENSION STEM REQUIRED IF STANDARD STEM IS MORE THAN FIVE (5) FEET FROM FINISHED GRADE.
2. GATE VALVE MUST MEET AWWA C509 REQUIREMENTS
3. SEE SPECIFICATIONS FOR VALVE OPEN DIRECTION REQUIRED.
4. PROVIDE A MINIMUM OF ONE VALVE KEY TO UTILITY OWNER. SEE SPECIFICATIONS FOR EXACT NUMBER TO BE REQUIRED.
5. OCCURS OFF OF PLAYING FIELD

6 ISOLATION VALVE

SECTION — SCALE: N.T.S.

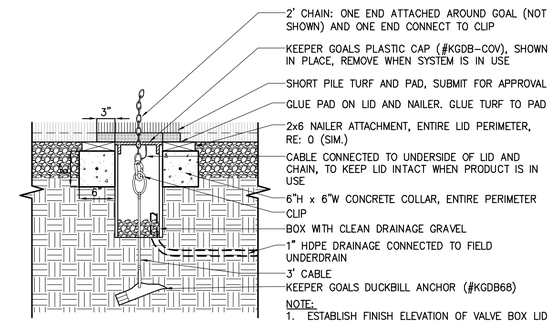

NOTE:

1. ESTABLISH FINISH ELEVATION OF VALVE BOX LID SO THAT IT IS FLUSH WITH THE SYNTHETIC TURF BACKING.
2. ONE ANCHOR REQUIRED AT EACH GOAL, AND ONE ANCHOR REQUIRED AT EACH BENCH.

3 TEAM BENCH AND SOCCER GOAL ANCHOR

SECTION — SCALE: 1" = 1'-0"

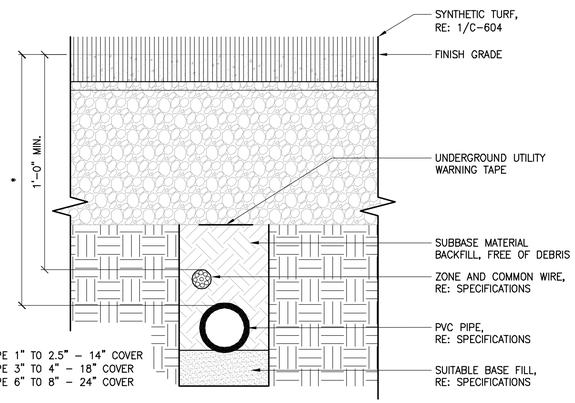

* NOTE
PVC PIPE 1" TO 2.5" – 14" COVER
PVC PIPE 3" TO 4" – 18" COVER
PVC PIPE 6" TO 8" – 24" COVER

8 IRRIGATION MAINLINE

SCALE: 3" = 1'-0"

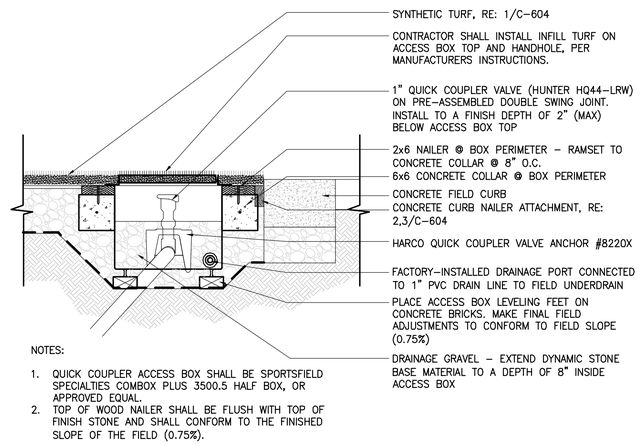

NOTES:

1. QUICK COUPLER ACCESS BOX SHALL BE SPORTSFIELD SPECIALTIES COMBOX PLUS 3500.5 HALF BOX, OR APPROVED EQUAL.
2. TOP OF WOOD NAILER SHALL BE FLUSH WITH TOP OF FINISH STONE AND SHALL CONFORM TO THE FINISHED SLOPE OF THE FIELD (0.75%).

5 QUICK COUPLER

SECTION — SCALE: 1" = 1'-0"

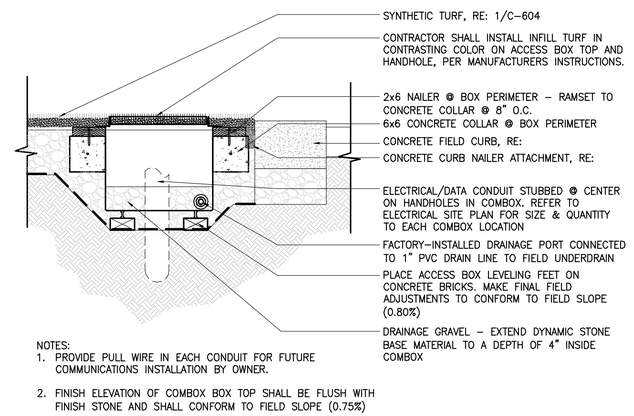

NOTES:

1. PROVIDE PULL WIRE IN EACH CONDUIT FOR FUTURE COMMUNICATIONS INSTALLATION BY OWNER.
2. FINISH ELEVATION OF COMBOX BOX TOP SHALL BE FLUSH WITH FINISH STONE AND SHALL CONFORM TO FIELD SLOPE (0.75%)

2 COMBOX

SECTION — SCALE: 1" = 1'-0"

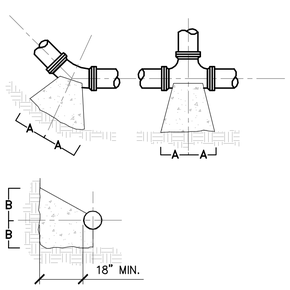

SOIL	SIZE	90 BEND		45 BEND		TEE	
		A	B	A	B	A	B
4000 PSF	2-1/2"	8"	10"	6"	8"	3"	8"
	3"	8"	10"	6"	8"	3"	8"
	4"	8"	10"	6"	8"	3"	8"
	6"	8"	10"	6"	8"	3"	8"
	8"	12"	12"	8"	10"	5"	9"
	10"	16"	14"	10"	12"	6"	10"
2000 PSF	2-1/2"	16"	10"	9"	10"	6"	8"
	3"	16"	10"	9"	10"	6"	8"
	4"	16"	10"	9"	10"	6"	8"
	6"	16"	10"	9"	10"	6"	8"
	8"	22"	13"	12"	13"	8"	10"
	10"	26"	17"	14"	17"	10"	13"

7 THRUST BLOCKS

SECTION — SCALE: N.T.S.

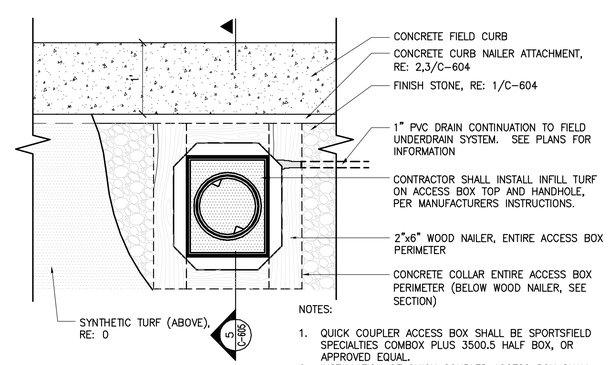

NOTES:

1. QUICK COUPLER ACCESS BOX SHALL BE SPORTSFIELD SPECIALTIES COMBOX PLUS 3500.5 HALF BOX, OR APPROVED EQUAL.
2. INSTALLATION OF QUICK COUPLER ACCESS BOX SHALL CONFORM TO MANUFACTURER'S PUBLISHED INSTRUCTIONS.
3. TOP OF WOOD NAILER SHALL BE FLUSH WITH TOP OF FINISH STONE AND SHALL CONFORM TO THE FINISHED SLOPE OF THE FIELD (0.75%).

4 QUICK COUPLER

PLAN — SCALE: 1" = 1'-0"

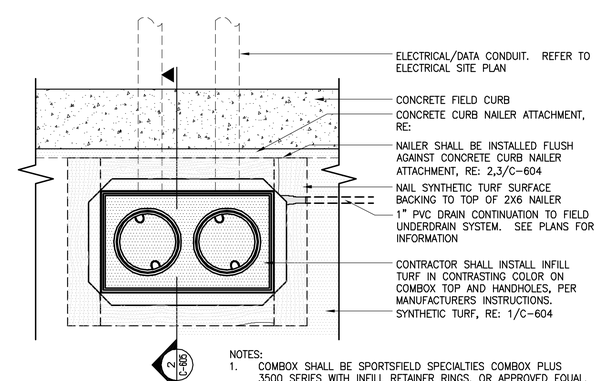

NOTES:

1. COMBOX SHALL BE SPORTSFIELD SPECIALTIES COMBOX PLUS 3500 SERIES WITH INFILL RETAINER RINGS, OR APPROVED EQUAL.
2. INSTALLATION OF COMBOX SHALL CONFORM TO MANUFACTURER'S PUBLISHED INSTRUCTIONS.
3. ONE CONDUIT IN EACH SIDE OF BOX
4. COLLAR AND LID SHALL CONFORM TO FIELD SLOPE (0.75%)

1 COMBOX

PLAN — SCALE: 1" = 1'-0"

File: V:\PROJECTS\ANYYK4\30059\CADD_ACAD\C601-C606-30059.DWG
Saved: 1/8/2016 9:07:54 AM Plotted: 1/13/2016 1:46:24 PM Current User: Merklein, Tim LastSavedBy: 3512

Drawing Copyright © 2015

CHA
6 Campus Drive
Parsippany, NJ 07054-4406
973.539.2125 · www.chacompanies.com

PETER L. LILHOLT, JR.
PROFESSIONAL ENGINEER N.J. LIC.
24GE04894200

IT IS A VIOLATION OF LAW FOR ANY PERSON, UNLESS THEY ARE ACTING UNDER THE DIRECTION OF A LICENSED PROFESSIONAL ENGINEER, ARCHITECT, LANDSCAPE ARCHITECT OR LAND SURVEYOR TO ALTER AN ITEM IN ANY WAY. IF AN ITEM BEARING THE STAMP OF A LICENSED PROFESSIONAL IS ALTERED, THE ALTERING ENGINEER, ARCHITECT, LANDSCAPE ARCHITECT OR LAND SURVEYOR SHALL STAMP THE DOCUMENT AND INCLUDE THE NOTATION "ALTERED BY" FOLLOWED BY THEIR SIGNATURE, THE DATE OF SUCH ALTERATION, AND A SPECIFIC DESCRIPTION OF THE ALTERATION.

PIONEERS

WILLIAM PATERSON UNIVERSITY

SOCCER FIELD IMPROVEMENTS

300 POMPTON RD.
WAYNE, NJ 07470

No.	Submittal / Revision	App'd.	By	Date
1	CONSTRUCTION DOCUMENTS	DD	TM	01/11/16

SITE DETAILS

Designed By:	Drawn By:	Checked By:
WM	TM	DD
Issue Date: 01/11/2016	Project No: 30059	Scale: AS SHOWN

Drawing No.:

C-605

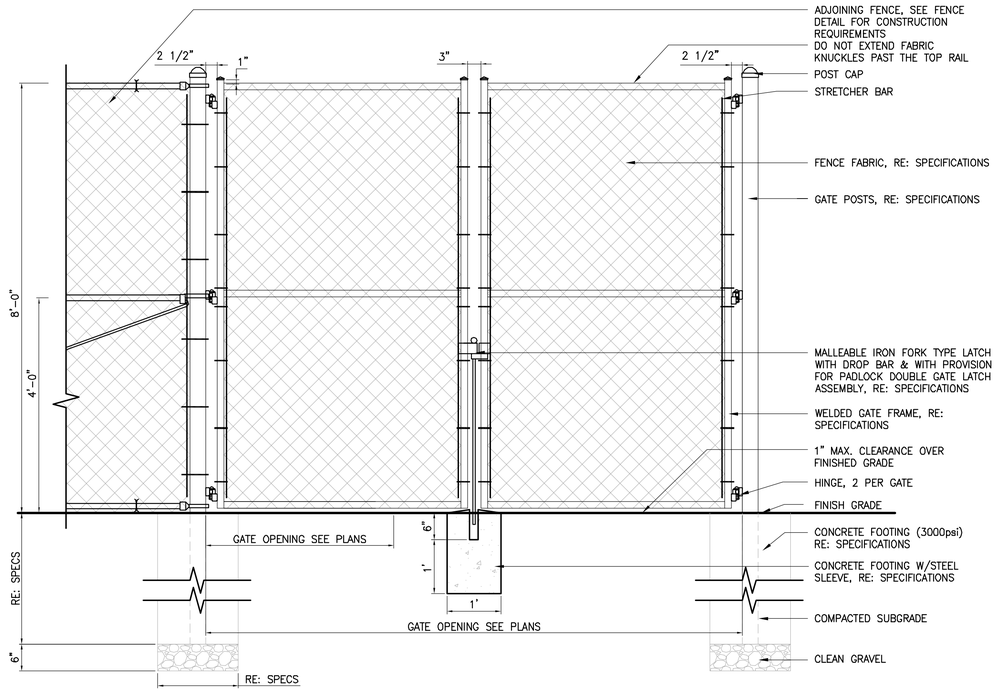

5 8'-0" HEIGHT CHAIN LINK FENCE DOUBLE SWING GATE

ELEVATION SCALE: 3/4" = 1'-0"

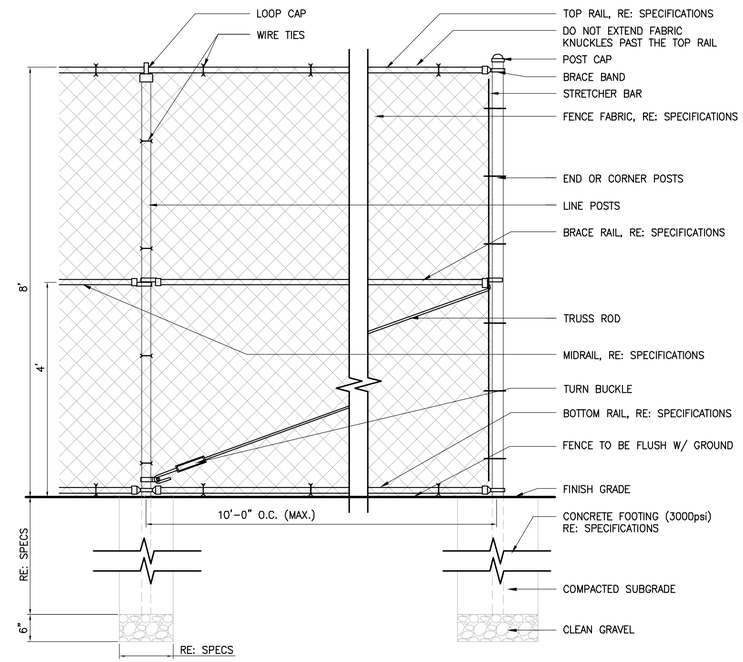

3 8'-0" HEIGHT CHAIN LINK FENCE

ELEVATION SCALE: 3/4" = 1'-0"

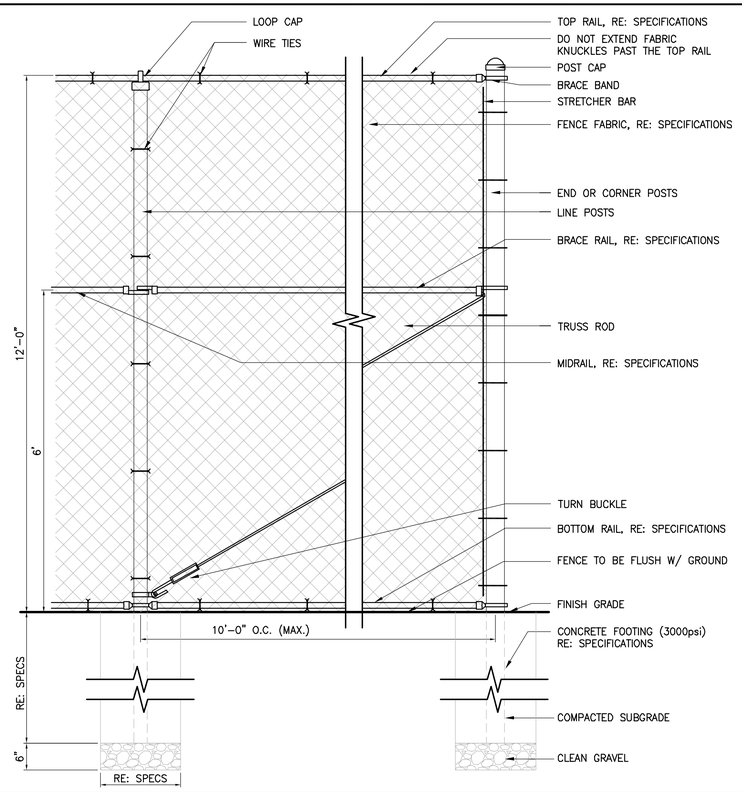

TYPICAL CHAIN LINK FENCE NOTES:
1. SEE SPECIFICATIONS FOR POST AND RAIL SIZING.
2. ALL POST FOOTINGS SHALL BE PER SPECIFICATIONS.
3. SEE SPECIFICATIONS FOR FENCE FINISH REQUIREMENTS.
4. HOLD DOWN TOP OF FOOTING BELOW CURB OR WALK (TYP.).

4 12'-0" HEIGHT CHAIN LINK FENCE (BACKSTOP)

ELEVATION SCALE: 3/4" = 1'-0"

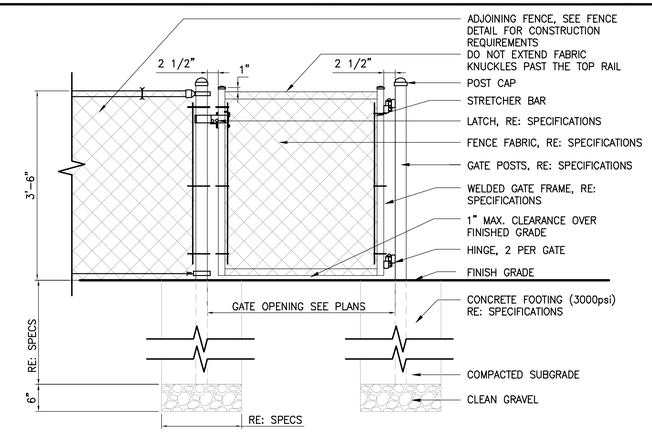

2 42" HEIGHT CHAIN LINK SINGLE SWING GATE

ELEVATION SCALE: 3/4" = 1'-0"

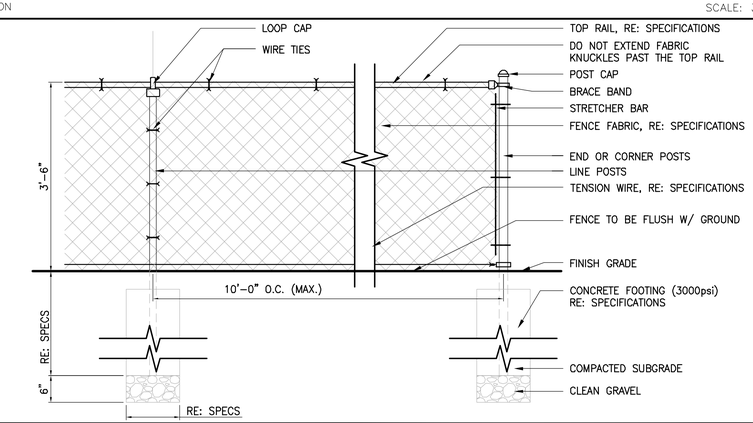

1 42" HEIGHT CHAIN LINK FENCE

ELEVATION SCALE: 3/4" = 1'-0"

Drawing Copyright © 2015

CHA
6 Campus Drive
Parsippany, NJ 07054-4406
973.539.2125 · www.chacompanies.com

PETER L. LILHOLT, JR.
PROFESSIONAL ENGINEER N.J. LIC.
24GE04894200

IT IS A VIOLATION OF LAW FOR ANY PERSON, UNLESS THEY ARE ACTING UNDER THE DIRECTION OF A LICENSED PROFESSIONAL ENGINEER, ARCHITECT, LANDSCAPE ARCHITECT OR LAND SURVEYOR TO ALTER AN ITEM IN ANY WAY. IF AN ITEM BEARING THE STAMP OF A LICENSED PROFESSIONAL IS ALTERED, THE ALTERING ENGINEER, ARCHITECT, LANDSCAPE ARCHITECT OR LAND SURVEYOR SHALL STAMP THE DOCUMENT AND INCLUDE THE NOTATION "ALTERED BY" FOLLOWED BY THEIR SIGNATURE, THE DATE OF SUCH ALTERATION, AND A SPECIFIC DESCRIPTION OF THE ALTERATION.

PIONEERS

WILLIAM PATERSON UNIVERSITY

SOCCER FIELD IMPROVEMENTS

300 POMPTON RD.
WAYNE, NJ 07470

No.	Submittal / Revision	App'd.	By	Date
1	CONSTRUCTION DOCUMENTS	DD	TM	01/11/16

SITE DETAILS

Designed By:	Drawn By:	Checked By:
WM	TM	DD
Issue Date:	Project No:	Scale:
01/11/2016	30059	AS SHOWN

Drawing No.:

C-606

File: V:\PROJECTS\ANYYX4\30059\CADD_ACAD\C601-C606-30059.DWG
Saved: 1/8/2016 9:07:54 AM Plotted: 1/13/2016 1:48:49 PM Current User: Merklein, Tim LastSavedBy: 3512

6 NOT USED

SCALE: N.T.S.

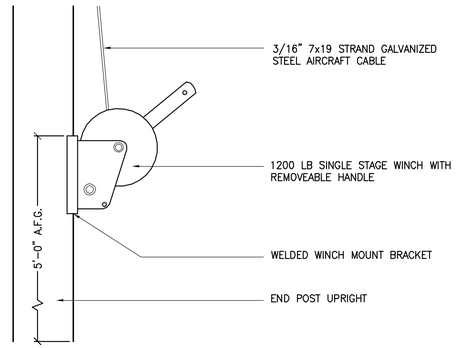

4 END POST WINCH

ELEVATION

SCALE: N.T.S.

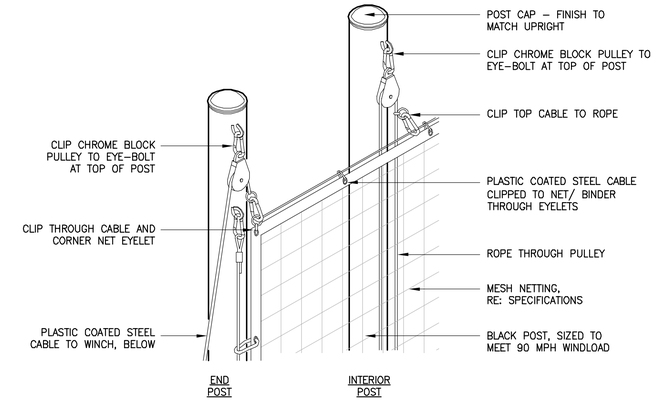

3 END POST WINCH

ELEVATION

SCALE: N.T.S.

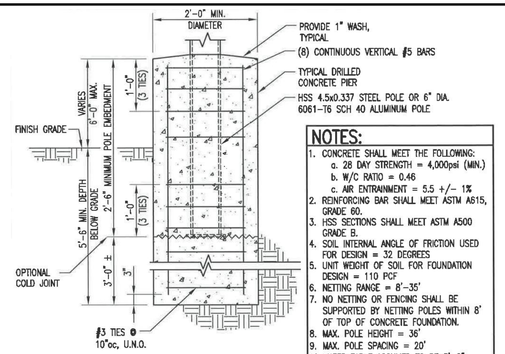

FOUNDATION TO BE USED WITH STORMGUARD 150# BREAKAWAY PIN ONLY

NOTES:

1. CONCRETE SHALL MEET THE FOLLOWING:
   a. 28 DAY STRENGTH = 4,000psi (MIN.)
   b. W/C RATIO = 0.46
   c. AIR ENTRAINMENT = 5.5 +/– 1%
2. REINFORCING BAR SHALL MEET ASTM A615, GRADE 60.
3. HSS SECTIONS SHALL MEET ASTM A500 GRADE B.
4. SOIL INTERNAL ANGLE OF FRICTION USED FOR DESIGN = 32 DEGREES
5. UNIT WEIGHT OF SOIL FOR FOUNDATION DESIGN = 110 PCF
6. NETTING RANGE = 8'–35'
7. NO NETTING OR FENCING SHALL BE SUPPORTED BY NETTING POLES WITHIN 8' OF TOP OF CONCRETE FOUNDATION.
8. MAX. POLE HEIGHT = 36'
9. MAX. POLE SPACING = 20'
10. WATER TABLE ASSUMED TO BE 3'–0" BELOW GRADE FOR DESIGN.
11. PROVIDE BITUMINOUS OR ASPHALT COATING ON ALL SURFACES OF EMBEDDED ALUMINUM
12. COMPACT SOIL SURROUNDING FOOTING TO 95% MODIFIED PROCTOR.

SYSTEM NOTES:

1. FOOTING FOR USE WITH #36 4" NETTING
2. CABLE SAG BETWEEN POLES = 0'–10" (MIN)
3. DESIGN WIND SPEED AT PIN FAILURE= 75mph
4. DESIGN WIND SPEED FOR BARE POLE = 105mph

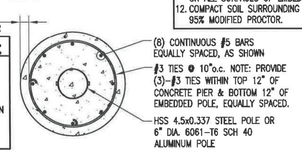

5 BALL STOP POST FOOTING

SECTION

SCALE: 3/4" = 1'–0"

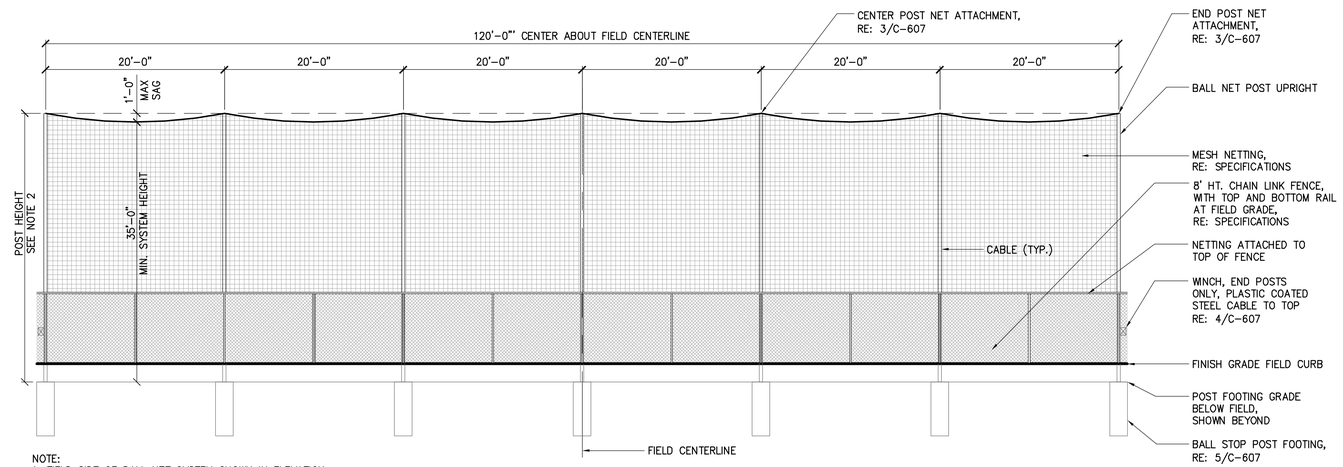

NOTE:
1. FIELD SIDE OF BALL NET SYSTEM SHOWN IN ELEVATION
2. NETTING TO BE REMOVABLE
3. POST HEIGHT TO BE DETERMINED BY MINIMUM SYSTEM HEIGHT (35'–0") & ALLOWABLE SAG IN NET (NOT TO EXCEED 1'–0")

2 120' LENGTH BALL STOP NETTING

ELEVATION

SCALE: 1/8" = 1'–0"

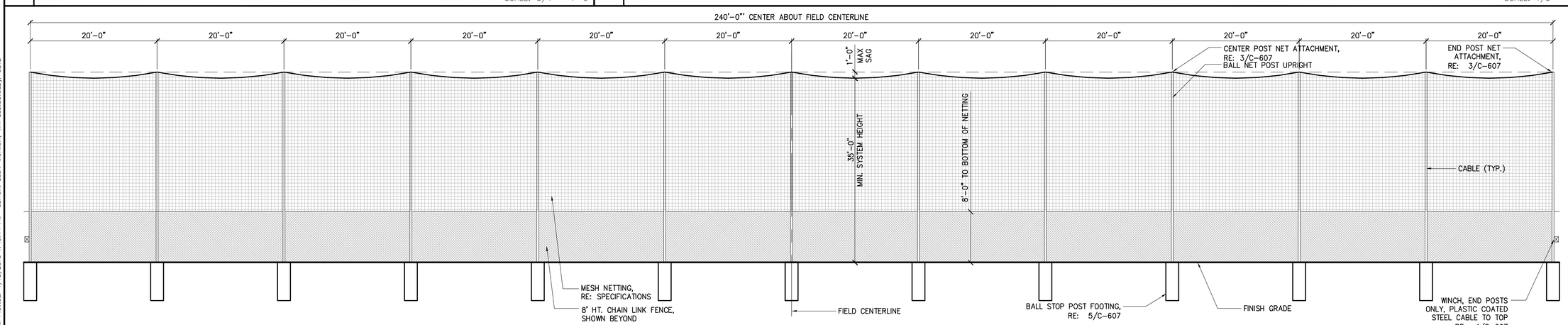

NOTE:
1. FIELD SIDE OF BALL NET SYSTEM SHOWN IN ELEVATION
2. NETTING TO BE REMOVABLE
3. POST HEIGHT TO BE DETERMINED BY MINIMUM SYSTEM HEIGHT (35'–0") & ALLOWABLE SAG IN NET (NOT TO EXCEED 1'–0")

1 240' LENGTH BALL STOP NETTING

ELEVATION

SCALE: 1/8" = 1'–0"

File: V:\PROJECTS\ANY\K41\30059\CADD_ACAD\C601-C606-30059.DWG
Saved: 1/8/2016 9:07:54 AM Plotted: 1/13/2016 1:49:14 PM Current User: Merkein, Tim LastSavedBy: 3512

Drawing Copyright © 2015

CHA
6 Campus Drive
Parsippany, NJ 07054-4406
973.539.2125 · www.chacompanies.com

PETER L. LILHOLT, JR.
PROFESSIONAL ENGINEER N.J. LIC.
24GE04894200

IT IS A VIOLATION OF LAW FOR ANY PERSON, UNLESS THEY ARE ACTING UNDER THE DIRECTION OF A LICENSED PROFESSIONAL ENGINEER, ARCHITECT, LANDSCAPE ARCHITECT OR LAND SURVEYOR TO ALTER AN ITEM IN ANY WAY. IF AN ITEM BEARING THE STAMP OF A LICENSED PROFESSIONAL IS ALTERED, THE ALTERING ENGINEER, ARCHITECT, LANDSCAPE ARCHITECT OR LAND SURVEYOR SHALL STAMP THE DOCUMENT AND INCLUDE THE NOTATION "ALTERED BY" FOLLOWED BY THEIR SIGNATURE, THE DATE OF SUCH ALTERATION, AND A SPECIFIC DESCRIPTION OF THE ALTERATION.

PIONEERS

WILLIAM PATERSON UNIVERSITY

SOCCER FIELD IMPROVEMENTS

300 POMPTON RD.
WAYNE, NJ 07470

No.	Submittal / Revision	App'd.	By	Date
1	CONSTRUCTION DOCUMENTS	DD	TM	01/11/16

SITE DETAILS

Designed By:	Drawn By:	Checked By:
WM	TM	DD
Issue Date: 01/11/2016	Project No: 30059	Scale: AS SHOWN

Drawing No.:

C-607

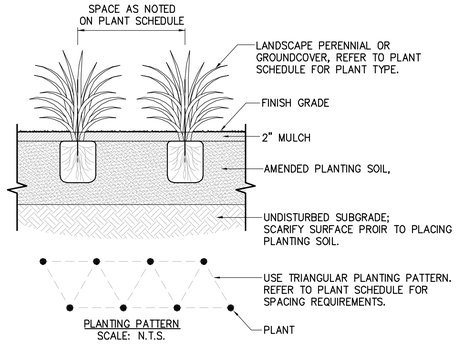

7 NOT USED

SCALE: N.T.S.

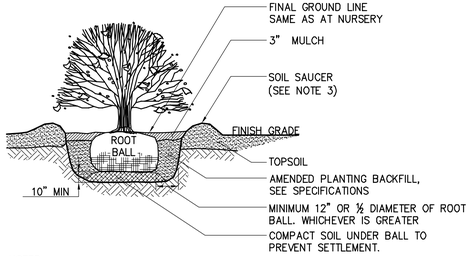

NOTES:

1. PLANTING SOIL MIX IN INDIVIDUAL PLANTING HOLES OR CONTINUOUS BEDS; SEE SCHEDULE OF SOIL AMENDMENTS IN SPECIFICATIONS.
2. AFTER PLACEMENT AND ROTATION OF SHRUB REMOVE ALL ROPES FROM ROOT BALL AND CUT AND REMOVE TOP OF BURLAP. COMPLETELY REMOVE BURLAP IF IT IS MADE OF SYNTHETIC MATERIAL.
3. DELETE SOIL SAUCER AROUND EACH SHRUB IF CONTINUOUS BED. PROVIDE NEAT TRIMMED SOIL EDGE AT CONTINUOUS BEDS AGAINST LAWN. WHERE PLANT BEDS ABUT CURBS OR WALKS MULCH SHOULD BE FLUSH WITH TOP OF CURBS AND EVEN WITH WALK SURFACES.
4. PRUNE BROKEN CANES AFTER PLANTING

6 SHRUB PLANTING

SECTION/ELEVATION — SCALE: N.T.S.

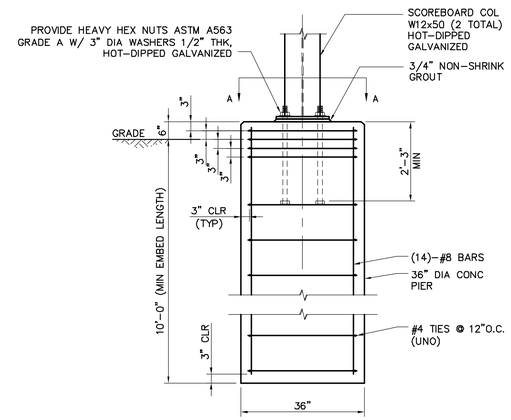

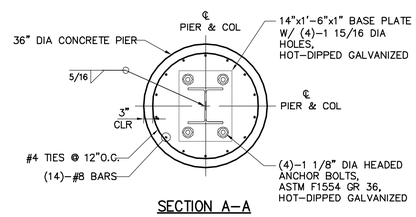

SECTION A-A

NOTES

1. COORDINATE LOCATION OF PIERS (2 TOTAL) WITH CIVIL DRAWINGS AND SCOREBOARD MANUFACTURER.
2. COORDINATE TRUSS AND PANEL ATTACHMENT TO COLUMNS WITH SCOREBOARD MANUFACTURER.
3. FOUNDATION DESIGNED FOR FOLLOWING LOADS:
   M = 40 FT-K
   V = 2.5 K
   P = 2.0 K
4. CONFIRM FINAL DESIGN LOADS WITH SCOREBOARD MANUFACTURER. PROVIDE SIGNED AND SEALED FOUNDATION SHOP DRAWINGS BASED UPON FINAL PANEL SELECTION. NOTIFY ENGINEER OF RECORD IF LOADS IN NOTE #3 ARE EXCEEDED. CONTRACTOR SHALL BE RESPONSIBLE FOR ALL REDESIGN FEES IF DESIGN LOADS ARE EXCEEDED.
5. SCOREBOARD COLUMN AND DRILLED SHAFT FOUNDATION DESIGN BASED ON:
   A. 2 SCOREBOARD SUPPORTS REQUIRED.
   B. ENTRY SIGN SIZE = 8'-0"x15'-0".
   C. ENTRY SIGN WEIGHT = +/- 600 LB.
   D. ENTRY SIGN MOUNTING HEIGHT = 4'-0" ABOVE GRADE.

NOTIFY ENGINEER OF RECORD IF BASIS FOR DESIGN IS EXCEEDED. CONTRACTOR SHALL BE RESPONSIBLE FOR ALL REDESIGN FEES IF BASIS FOR DESIGN IS EXCEEDED.

6. IF ROCK IS ENCOUNTERED PRIOR TO REACHING FULL EMBED DEPTH, DRILLED SHAFT SHALL BE SOCKETED INTO ROCK TO ACHIEVE FULL EMBED DEPTH SPECIFIED.

4 ENTRY SIGN FOOTINGS

SECTION — SCALE: N.T.S.

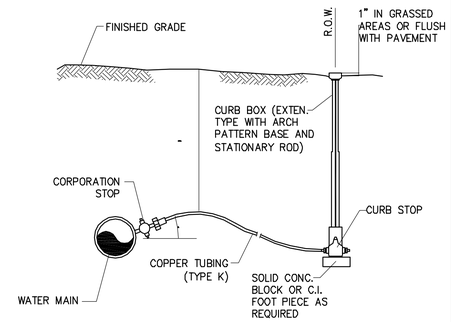

3 WATER SERVICE PIPE CONNECTION

SECTION — SCALE: N.T.S.

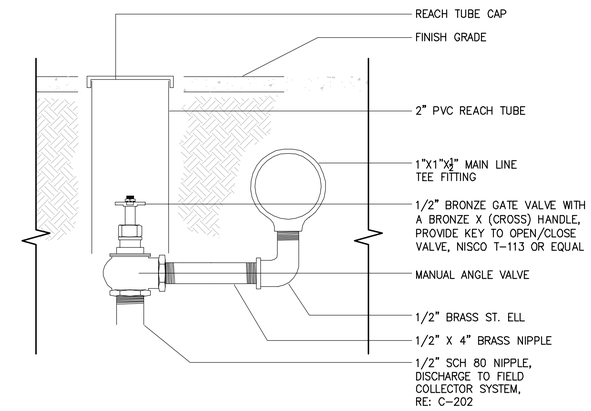

2 WATER SERVICE DRAIN VALVE

SECTION — SCALE: N.T.S.

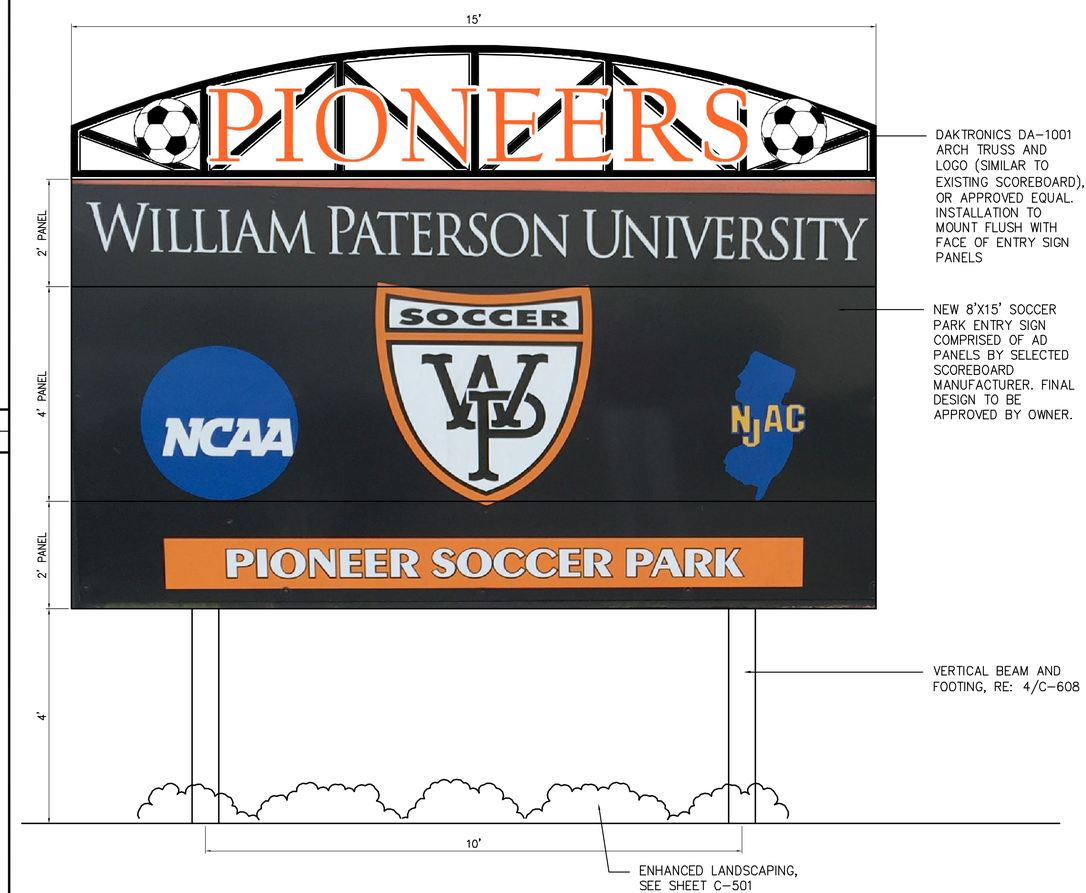

1 NEW ENTRY SIGN

ELEVATION — SCALE: 3/4" = 1'-0"

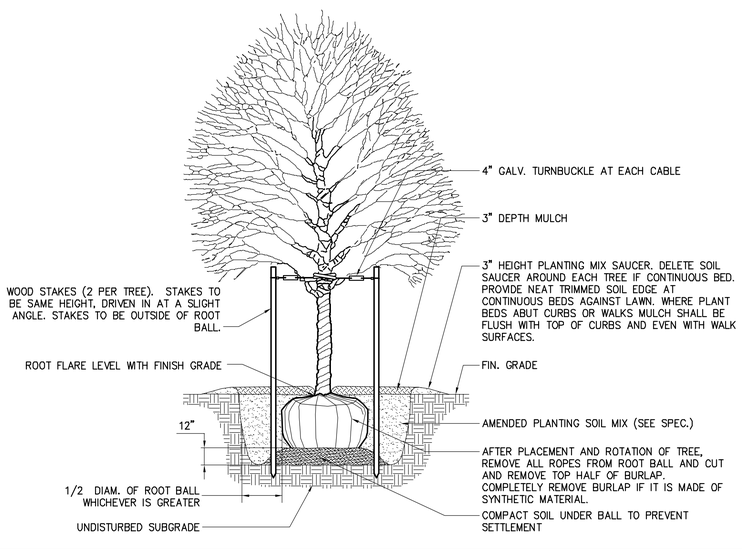

NOTES:

1. PRUNE ANY BROKEN BRANCHES AFTER FINAL PLACEMENT. PRUNE PERIMETER BRANCHES AS REQUIRED BUT RETAIN NATURAL SHAPE OF TREE. NEVER CUT A LEADER. PRUNING TO BE PERFORMED BY A QUALIFIED AROBORIST/BOTANIST ONLY.
2. TREE SHALL BE PLUMB AND STRAIGHT.

5 DECIDUOUS TREE PLANTING AND STAKING

SECTION/ELEVATION — SCALE: N.T.S.

Drawing Copyright © 2015

CHA
6 Campus Drive
Parsippany, NJ 07054-4406
973.539.2125 · www.chacompanies.com

PETER L. LILHOLT, JR.
PROFESSIONAL ENGINEER N.J. LIC.
24GE04894200

IT IS A VIOLATION OF LAW FOR ANY PERSON, UNLESS THEY ARE ACTING UNDER THE DIRECTION OF A LICENSED PROFESSIONAL ENGINEER, ARCHITECT, LANDSCAPE ARCHITECT OR LAND SURVEYOR TO ALTER AN ITEM IN ANY WAY. IF AN ITEM BEARING THE STAMP OF A LICENSED PROFESSIONAL IS ALTERED, THE ALTERING ENGINEER, ARCHITECT, LANDSCAPE ARCHITECT OR LAND SURVEYOR SHALL STAMP THE DOCUMENT AND INCLUDE THE NOTATION "ALTERED BY" FOLLOWED BY THEIR SIGNATURE, THE DATE OF SUCH ALTERATION, AND A SPECIFIC DESCRIPTION OF THE ALTERATION.

PIONEERS

WILLIAM PATERSON UNIVERSITY

SOCCER FIELD IMPROVEMENTS

300 POMPTON RD.
WAYNE, NJ 07470

No.	Submittal / Revision	App'd.	By	Date
1	CONSTRUCTION DOCUMENTS	DD	TM	01/11/16

SITE DETAILS

Designed By:	Drawn By:	Checked By:
WM	TM	DD
Issue Date: 01/11/2016	Project No: 30059	Scale: AS SHOWN

Drawing No.:

C-608

File: V:\PROJECTS\ANY\X4\30059\CADD_ACAD\C601-C606-30059.DWG
Saved: 1/8/2016 9:07:54 AM Plotted: 1/13/2016 1:49:40 PM Current User: Merklein, Tim LastSavedBy: 3512

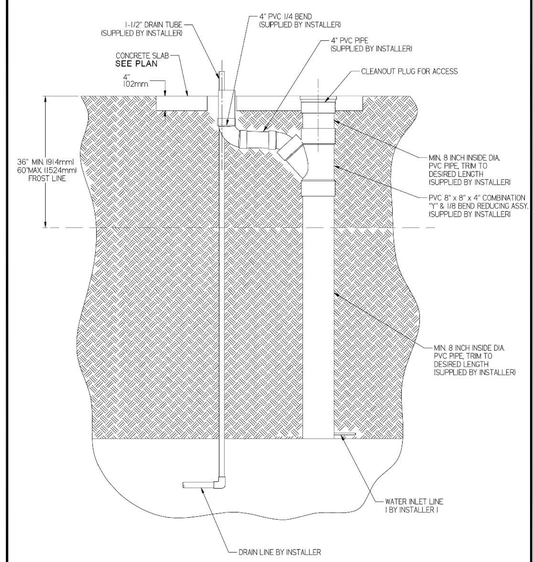

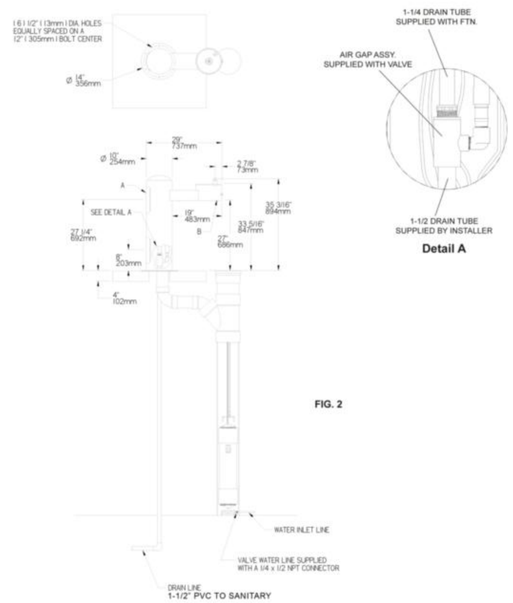

FIG. 2

LEGEND
A = ACCESS PANEL (8" X 10")
B = REMOVABLE BOTTOM COVER

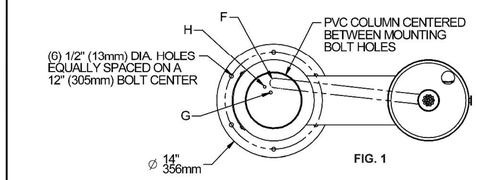

FIG. 1

SITE PREPARATION DETAIL
FIG. 2

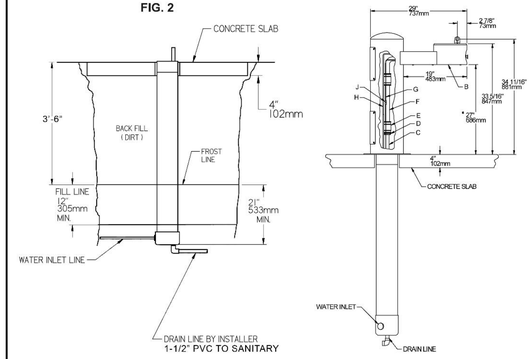

LEGEND
A = ACCESS PANEL (8" X 10")
B = REMOVABLE BOTTOM COVER
C = 1" PVC DRAIN
D = PRESSURE FITTING 1-1/4" x 3/4"
E = CONNECTOR 1-1/4" TO 1-1/4"
F = 1-1/4" DRAIN TUBE
G = AIR CONTROL LINE
H = 1/4" WATER LINE
J = CONNECTOR FOR AIR CONTROL LINE

FIG. 1

6 DRINKING FOUNTAIN DETAILS – ELKAY MODEL LK4410 FRK

SECTION — SCALE: N.T.S.

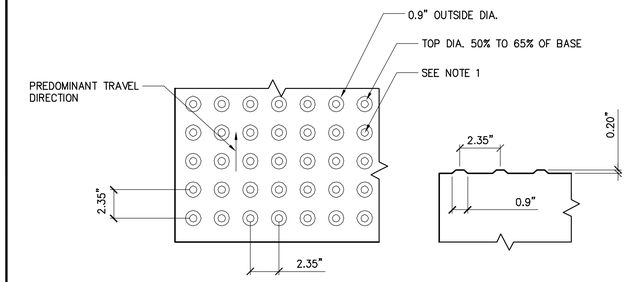

PARTIAL PLAN — PARTIAL SECTION

NOTES:

1. THE TRUNCATED DOME SURFACE SHALL CONTRAST VISUALLY WITH ADJOINING WALKING SURFACES EITHER LIGHT–ON–DARK OR DARK–ON–LIGHT. THE MATERIAL USED TO PROVIDE CONTRAST SHALL BE AN INTEGRAL PART OF THE TRUNCATED DOME SURFACE.
2. THE DETECTABLE WARNINGS SHALL EXTEND THE FULL WIDTH OF THE CURB RAMP OR FLUSH SURFACE.
3. DOMES SHALL BE ALIGNED ON A SQUARE GRID IN THE PREDOMINANT DIRECTION OF TRAVEL.

3 DETECTABLE WARNING FIELD

PLAN / SECTION — SCALE: N.T.S.

NOTES:

1. TRANSITION AND FLUSH SECTIONS SHALL BE CUT STRAIGHT OR TO THE PROPER RADIUS AS DESIGNATED ON PLANS.
2. FLUSH CURB SECTIONS ARE 6'–0" LENGTH TYPICAL EXCEPT WHERE NOTED OTHERWISE ON PLANS. FLUSH CURB SECTIONS ARE TO MEET LEVEL WITH ASPHALT PAVEMENT SURFACES WITH NO REVEAL.
3. PROVIDE HEAVY BROOM FINISH ON ALL CONCRETE RAMP SURFACES WITH THE EXCEPTION OF THE DETECTABLE WARNING AREA.
4. LENGTH OF RAMP SHALL BE AS REQUIRED TO MAINTAIN A 1:12 SLOPE.
5. DETECTABLE WARNING SURFACE TO COVER THE FIRST 24" OF RAMP SURFACE FOR FULL WIDTH OF RAMP.

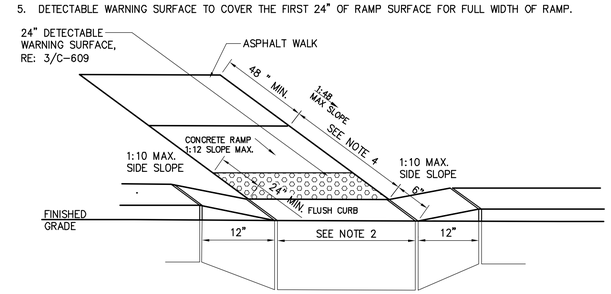

2 SIDEWALK CURB RAMP

ISOMETRIC — SCALE: N.T.S.

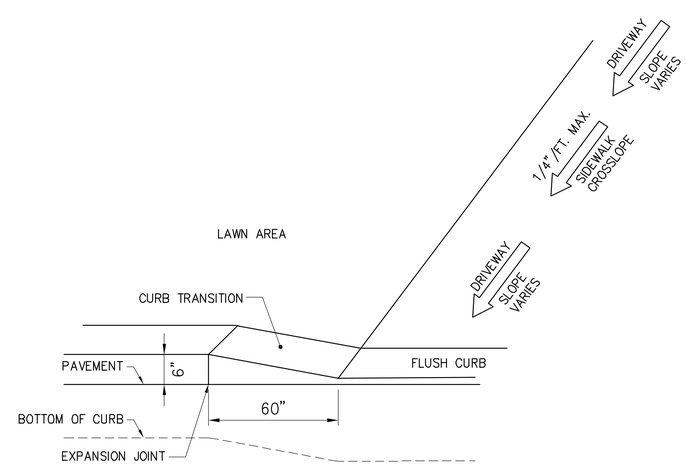

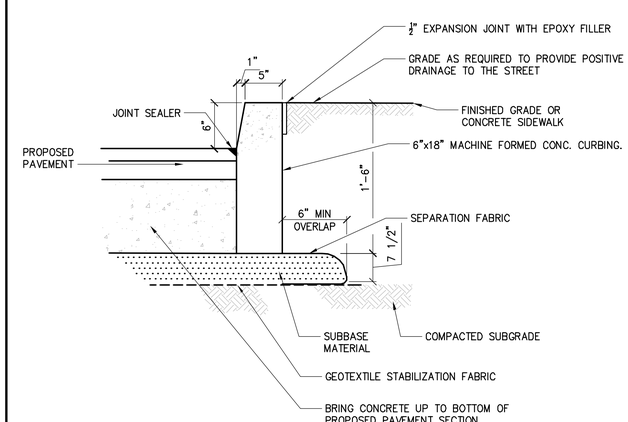

5 NOT USED

SCALE: N.T.S.

4 DRIVEWAY CURB

ISOMETRIC — SCALE: 1" = 1'–0"

1 CONCRETE CURB

SECTION — SCALE: N.T.S.

Drawing Copyright © 2015

CHA
6 Campus Drive
Parsippany, NJ 07054-4406
973.538.2325 - www.chacompanies.com

PETER L. LILHOLT, JR.
PROFESSIONAL ENGINEER N.J. LIC.
24GE04894200

IT IS A VIOLATION OF LAW FOR ANY PERSON, UNLESS THEY ARE ACTING UNDER THE DIRECTION OF A LICENSED PROFESSIONAL ENGINEER, ARCHITECT, LANDSCAPE ARCHITECT OR LAND SURVEYOR TO ALTER AN ITEM IN ANY WAY. IF AN ITEM BEARING THE STAMP OF A LICENSED PROFESSIONAL IS ALTERED, THE ALTERING ENGINEER, ARCHITECT, LANDSCAPE ARCHITECT OR LAND SURVEYOR SHALL STAMP THE DOCUMENT AND INCLUDE THE NOTATION "ALTERED BY" FOLLOWED BY THEIR SIGNATURE, THE DATE OF SUCH ALTERATION, AND A SPECIFIC DESCRIPTION OF THE ALTERATION.

PIONEERS

WILLIAM PATERSON UNIVERSITY

SOCCER FIELD IMPROVEMENTS

300 POMPTON RD.
WAYNE, NJ 07470

No.	Submittal / Revision	App'd.	By	Date
1	CONSTRUCTION DOCUMENTS	DD	TM	01/11/16

SITE DETAILS

Designed By:	Drawn By:	Checked By:
WM	TM	DD
Issue Date: 01/11/2016	Project No: 30059	Scale: AS SHOWN

Drawing No.:
C-609

File: V:\PROJECTS\ANY\K4\30059\CADD_ACAD\C601-C606-30059.DWG
Saved: 1/8/2016 9:07:54 AM Plotted: 1/13/2016 1:59:17 PM Current User: Merkelin, Tim LastSavedBy: 3512

NOTES:

1. USE PAVED DRIVES AND LOTS, OWNED BY THE UNIVERSITY, AS ACCESS TO THE CONSTRUCTION SITE. ALL SEDIMENT SPILLED, DROPPED, WASHED OR TRACKED ONTO ROADWAYS (PUBLIC OR PRIVATE) MUST BE REMOVED IMMEDIATELY.
2. INSTALL EROSION AND SEDIMENT CONTROLS MEASURES NECESSARY TO PROTECT THE EXISTING OUTFALL PIPES AND THE PROPERTY DOWNSTREAM OF THE OUTFALL PIPES DURING CONSTRUCTION.
3. THE CONTRACTOR IS RESPONSIBLE FOR ENSURING THAT ANY MATERIAL BROUGHT ON SITE IS CLEAN FILL.
4. UNTIL THE SITE IS STABILIZED, ALL EROSION AND SEDIMENT BMPs SHALL BE INSPECTED REGULARLY AND MAINTAINED PROPERLY.
5. EROSION CONTROL BLANKETING SHALL BE INSTALLED ON ALL SLOPES 3H:1V OR STEEPER WITHIN 50 FEET OF A SURFACE WATER.
6. TREE PROTECTION SHALL BE PROVIDED FOR ALL TREES PRESERVED DURING AND AFTER CONSTRUCTION IN THE AREA OF DISTURBANCE.

TOTAL LIMIT OF DISTURBANCE = 3.22 ACRES

LEGEND

LIMIT OF DISTURBANCE	
SOIL TYPE	BowrB – HSG C
TREE PROTECTION	TP
SILT FENCE	SF
TEMPORARY SOIL STOCKPILE	

SOIL TYPE NOTES:

BonBa – BOONTON SILT LOAM, 3–8% SLOPES, STONY HYDRAULIC SOIL GROUP C

HcBb – HASBROUCK SILT LOAM, 0–8% SLOPES, VERY STONY HYDRAULIC SOIL GROUP C/C

HomC – HOLYOKE–ROCK OUTCROP COMPLEX, 3–15% SLOPES HYDRAULIC SOILGROUP D

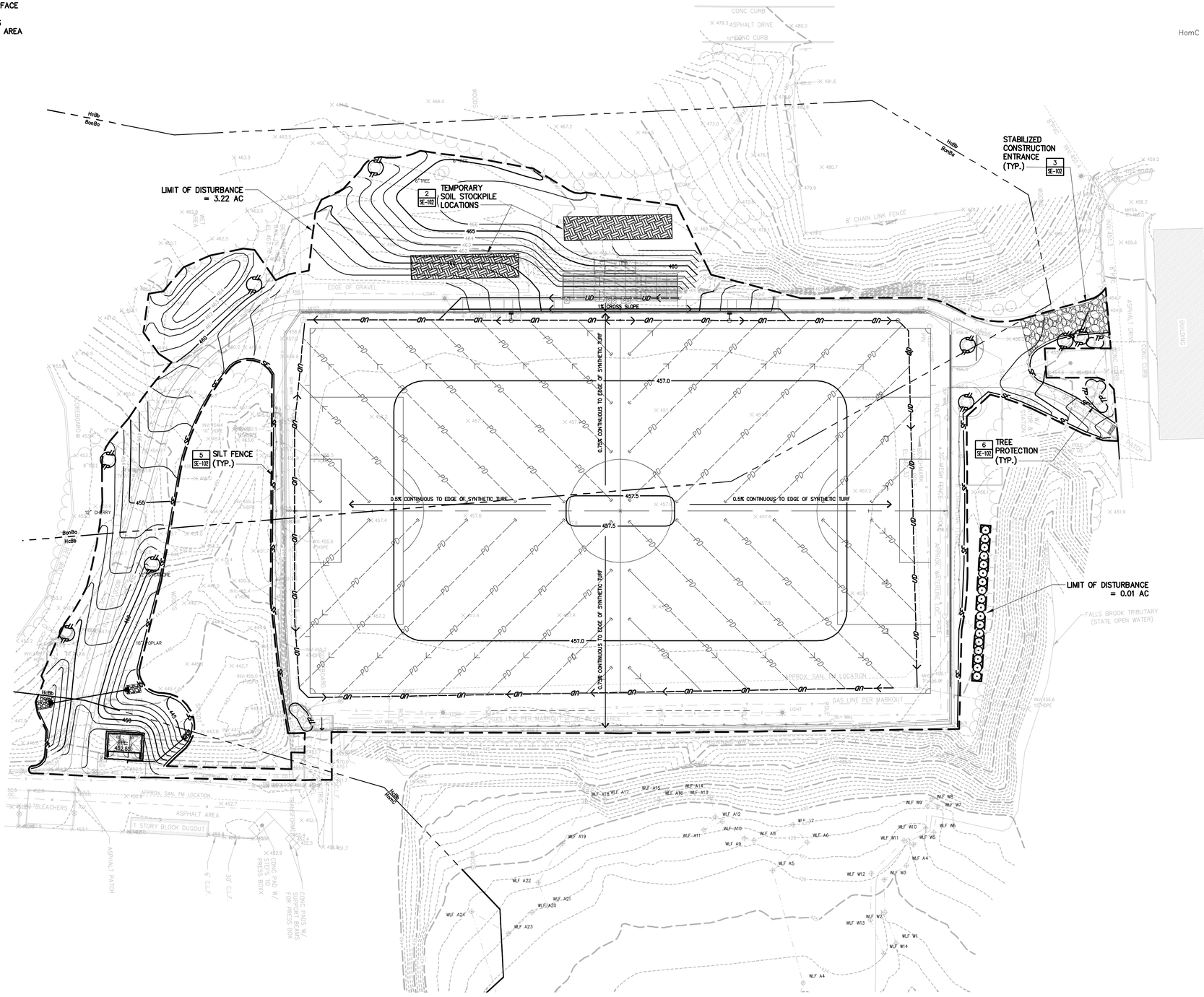

0 30' 60'
Scale in feet

Drawing Copyright © 2015

CHA
6 Campus Drive
Parsippany, NJ 07054-4406
973.538.3320 • www.chacompanies.com

IT IS A VIOLATION OF LAW FOR ANY PERSON, UNLESS THEY ARE ACTING UNDER THE DIRECTION OF A LICENSED PROFESSIONAL ENGINEER, ARCHITECT, LANDSCAPE ARCHITECT OR LAND SURVEYOR TO ALTER AN ITEM IN ANY WAY. IF AN ITEM BEARING THE STAMP OF A LICENSED PROFESSIONAL IS ALTERED, THE ALTERING ENGINEER, ARCHITECT, LANDSCAPE ARCHITECT OR LAND SURVEYOR SHALL STAMP THE DOCUMENT AND INCLUDE THE NOTATION "ALTERED BY" FOLLOWED BY THEIR SIGNATURE, THE DATE OF SUCH ALTERATION, AND A SPECIFIC DESCRIPTION OF THE ALTERATION.

PIONEERS

WILLIAM PATERSON UNIVERSITY

SOCCER FIELD IMPROVEMENTS

300 POMPTON RD.
WAYNE, NJ 07470

No.	Submittal / Revision	App'd.	By	Date
1	CONSTRUCTION DOCUMENTS			01/11/16

SOIL EROSION AND SEDIMENT CONTROL PLAN

Designed By:	Drawn By:	Checked By:
EG	EG	DD
Issue Date: 01/11/2016	Project No: 30059	Scale: AS SHOWN

Drawing No.:
SE-101

File: V:\PROJECTS\ANY\K4\30059\CADD_ACAD\SE101-30059.DWG
Saved: 1/13/2016 2:20:57 PM Plotted: 1/13/2016 2:28:25 PM Current User: Merklein, Tim LastSavedBy: 4420

HUDSON–ESSEX–PASSAIC COUNTY SOIL CONSERVATION DISTRICT

SOIL EROSION AND SEDIMENT CONTROL NOTES

1. ALL SOIL EROSION AND SEDIMENT CONTROL PRACTICES ON THIS PLAN WILL BE CONSTRUCTED IN ACCORDANCE WITH THE "NEW JERSEY STANDARDS FOR SOIL EROSION AND SEDIMENT CONTROL" 7TH EDITION LAST REVISED JANUARY 2014. THESE MEASURES WILL BE INSTALLED PRIOR TO ANY MAJOR SOIL DISTURBANCE OR IN THEIR PROPER SEQUENCE AND MAINTAINED UNTIL PERMANENT PROTECTION IS ESTABLISHED.

2. ALL SOIL TO BE EXPOSED OR STOCKPILED FOR A PERIOD OF GREATER THAN 14 DAYS, AND NOT UNDER ACTIVE CONSTRUCTION, WILL BE TEMPORARILY SEEDED AND HAY MULCHED OR OTHERWISE PROVIDED WITH VEGETATIVE COVER. THIS TEMPORARY COVER SHALL BE MAINTAINED UNTIL SUCH TIME WHEREBY PERMANENT RESTABILIZATION IS ESTABLISHED.

3. SEEDING DATES: THE FOLLOWNG SEEDING DATES ARE BEST RECOMMENDED TO ESTABLISH PERMANENT VEGETATIVE COVER WITHIN MOST LOCATIONS IN THE HEPSCD: SPRING – 3/1–5/15 AND FALL – 8/15 – 10/1

4. SEDIMENT FENCES ARE TO BE PROPERLY TRENCHED AND MAINTAINED UNTIL PERMANENT VEGETATIVE COVER IS ESTABLISHED

5. ALL STORM DRAINAGE INLETS SHALL BE PROTECTED BY ONE OF THE PRACTICES ACCEPTED IN THE STANDARDS, AND PROTECTION SHALL REMAIN UNTIL PERMANENT STABILIZATION HAS BEEN ESTABLISHED. STORM DRAINAGE OUTLET POINTS SHALL BE PROTECTED AS REQUIRED BEFORE THEY BECOME FUNCTIONAL.

6. MULCH MATERIALS SHALL BE UN–ROTTED SMALL GRAIN STRAW APPLIED AT THE RATE OF 70 TO 90 POUNDS PER 1,000 SQUARE FEET AND ANCHORED WITH A MULCH ANCHORING TOOL, LIQUID MULCH BINDERS, OR NETTING TIE DOWN. OTHER SUITABLE MATERIALS MAY BE USED IF APPROVED BY THE SOIL CONSERVATION DISTRICT.

7. ALL EROSION CONTROL DEVICES SHALL BE PERIODICALLY INSPECTED, MAINTAINED AND CORRECTED BY THE CONTRACTOR. ANY DAMAGE INCURRED BY EROSION SHALL BE RECTIFIED IMMEDIATELY.

8. THE HUDSON–ESSEX–PASSAIC SOIL CONSERVATION DISTRICT WILL BE NOTIFIED IN WRITING AT LEAST 48 HOURS PRIOR TO ANY SOIL DISTURBING ACTIVITIES. FAX – (973) 364–0784 OR EMAIL – INFORMATION@HEPSCD.ORG

9. THE APPLICANT MUST OBTAIN A DISTRICT ISSUED REPORT–OF–COMPLIANCE PRIOR TO APPLYING FOR THE CERTIFICATE OF OCCUPANCY OR TEMPORARY CERTIFICATE OF OCCUPANCY FROM THE RESPECTIVE MUNICIPALITY, NJ – DCA OR ANY OTHER CONTROLLING AGENCY. CONTACT THE DISTRICT AT 973–364–0786 TO REQUEST A FINAL INSPECTION, GIVING ADVANCED NOTICE UPON COMPLETION OF THE RESTABILIZATION MEASURES. A PERFORMANCE DEPOSIT MAY BE POSTED WITH THE DISTRICT WHEN WINTER WEATHER OR SNOW COVER PROHIBITS THE PROPER APPLICATION OF SEED, MULCH, FERTILIZER OR HYDRO–SEED.

10. PAVED ROADWAYS MUST BE KEPT CLEAN AT ALL TIMES. DO NOT UTILIZE A FIRE OR GARDEN HOSE TO CLEAN ROADS UNLESS THE RUNOFF IS DIRECTED TO A PROPERLY DESIGNED AND FUNCTIONING SEDIMENT BASIN. WATER PUMPED OUT OF THE EXCAVATED AREAS CONTAINS SEDIMENTS THAT MUST BE REMOVED PRIOR TO DISCHARGING TO RECEIVING BODIES OF WATER USING REMOVABLE PUMPING STATIONS, SUMP PITS, PORTABLE SEDIMENTATION TANKS AND/OR SILT CONTROL BAGS.

11. ALL SURFACES HAVING LAWN OR LANDSCAPING AS FINAL COVER ARE TO BE PROVIDED TOPSOIL PRIOR TO RE–SEEDING, SODDING OR PLANTING. A DEPTH OF 5 INCHES (UNSETTLED) IS RECOMMENDED.

12. ALL PLAN REVISIONS MUST BE SUBMITTED TO THE DISTRICT FOR PROPER REVIEW AND APPROVAL.

13. A CRUSHED STONE WHEEL CLEANING TRACKING–PAD IS TO BE INSTALLED AT ALL SITE EXITS USING 2 ½ –1"CRUSHED ANGULAR STONE (ASTM 2 OR 3) TO A MINIMUM LENGTH OF 50 FEET AND MINIMUM DEPTH OF 6". ALL DRIVEWAYS MUST BE PROVIDED WITH CRUSHED STONE UNTIL PAVING IS COMPLETE.

14. STEEP SLOPES INCURRING DISTURBANCE MAY REQUIRE ADDITIONAL STABILIZATION MEASURES. THESE "SPECIAL" MEASURES SHALL BE DESIGNED BY THE APPLICANT'S ENGINEER AND BE APPROVED BY THE SOIL CONSERVATION DISTRICT.

15. THE HUDSON–ESSEX–PASSAIC SOIL CONSERVATION DISTRICT SHALL BE NOTIFIED, IN WRITING, FOR THE SALE OF ANY PORTION OF THE PROJECT OR FOR THE SALE OF INDIVIDUAL LOTS. NEW OWNERS' INFORMATION SHALL BE PROVIDED. ADDITIONAL MEASURES DEEMED NECESSARY BY DISTRICT OFFICIALS SHALL BE IMPLEMENTED AS CONDITIONS WARRANT.

SEQUENCE OF CONSTRUCTION

ACTIVITY	APPROX. DURATION (DAYS)
1. NOTIFY THE HUDSON–ESSEX–PASSAIC SOIL CONSERVATION DISTRICT, IN WRITING, 48 HOURS BEFORE LAND DISTURBANCE.	1
2. INSTALL SILT FENCE, INLET FILTERS AND EROSION CONTROL MEASURES AROUND WORK AREA, AS NEEDED.	1
3. CONSTRUCT DRAINAGE FACILITIES AND SITE IMPROVEMENTS.	60
4. STABILIZE AREAS NOT SUBJECT TO CONSTRUCTION TRAFFIC THAT WILL BE LEFT EXPOSED FOR MORE THAN 30 DAYS.	ONGOING
5. RESTORE ALL ACCESS AREAS AND ANY PUBLIC OR PRIVATE PROPERTY TEMPORARILY MOVED OR DAMAGED DURING CONSTRUCTION.	ONGOING
6. BEGIN PERMANENT STABILIZATION METHODS (TOPSOIL, FERTILIZER, SEED) THROUGH THE WORK SITE.	2
7. REMOVE ALL TEMPORARY SOIL EROSION AND SEDIMENT CONTROL MEASURES.	1
8. NOTIFY ENGINEER OF COMPLETION OF WORK.	1
9. SCHEDULE FINAL INSPECTION WITH THE HEPSCD.	1

TOPSOIL NOTES

1. ALL AREAS TO BE SEEDED OR PLANTED SHALL RECEIVE TOPSOIL (5" MINIMUM DEPTH).

2. TOPSOIL SHALL CONSIST OF FERTILE, FRIABLE, NATURAL LOAM FREE OF SUBSOIL, CLAY LUMPS, BRUSH, STONES OR OTHER DELETERIOUS MATERIALS LARGER THAN 2" IN GREATEST DIMENSION CONFORMING TO THE REQUIREMENTS OF NJDOT SECTION 909.10 AND MEETING THE FOLLOWING GRADATION, pH AND ORGANIC CONTENT REQUIREMENTS:

SIEVE	PERCENT PASSING
2"	100
1"	85–100
¼"	65–100
NO. 200	20–80

pH RANGE: 5.5 – 7.6
ORGANIC CONTENT: 2% – 20%

3. PROPOSED TOPSOIL SHALL BE TESTED BY INDEPENDENT TESTING FACILITY WITH TEST RESULTS SUBMITTED TO THE ENGINEER FOR APPROVAL. CONTRACTOR SHALL PAY FOR ALL TESTING. ACCEPTANCE OF TOPSOIL SHALL BE BASED UPON TEST RESULTS. ONE TEST SHALL BE PERFORMED PER 100 C.Y. OF TOPSOIL.

4. NATURAL TOPSOIL MAY BE AMENDED WITH APPROVED MATERIALS, BY APPROVED METHODS, TO MEET THE ABOVE SPECIFICATIONS.

MULCH NOTES

1. USE MULCHING IN CONJUNCTION WITH ALL SEEDING. DURING THE NON–GROWING SEASON MONTHS (NOVEMBER – MARCH), USE MULCH ALONE FOR TEMPORARY STABILIZATION.

2. FOR TEMPORARY STABILIZATION, APPLY MULCH UNIFORMLY BY HAND OR MECHANICALLY SO THAT APPROXIMATELY 95% OF THE SOIL SURFACE IS COVERED. FOR PERMANENT STABILIZATION, APPLY MULCH UNIFORMLY BY HAND OR MECHANICALLY SO THAT APPROXIMATELY 85% OF THE SOIL SURFACE IS COVERED.

3. WHEN USING MULCH ALONE, SPREAD UNIFORMLY UNROTTED, SMALL–GRAIN STRAW AT 90 TO 115 POUNDS PER 1,000 SQUARE FEET AND ANCHORED WITH A MULCH ANCHORING TOOL, LIQUID MULCH BINDERS, OR NETTING TIE DOWN.

4. SUITABLE MATERIAL FOR SEEDED AREAS IS CLEAN STRAW CONSISTING OF STALKS OF OATS, WHEAT, RYE OR OTHER APPROVED CROPS WHICH ARE FREE OF NOXIOUS WEED SEEDS. STRAW SHALL BE APPLIED AT THE RATE OF 70 TO 90 POUNDS PER 1,000 SF AND ANCHORED WITH A MULCHING ANCHORING TOOL, LIQUID MULCH BINDER, OR NETTING TIE DOWN.

DUST CONTROL NOTES

THE FOLLOWING METHODS SHOULD BE CONSIDERED FOR CONTROLLING DUST:

MULCHES – UNROTTED, SMALL–GRAIN STRAW IS SPREAD 90 TO 115 LBS PER 1,000 SQUARE FEET AND ANCHORED WITH LIQUID BINDERS, NETTINGS FASTENED DOWN OR PEGS AND TWINE.

VEGETATIVE COVER – REFER TO SEEDING NOTES FOR TEMPORARY AND PERMANENT VEGETATIVE STABILIZATION.

SOD SHALL BE OF UNIFORM THICKNESS, TYPICALLY ⅞ INCH, PLUS OR MINUS ¼ INCH AT TIME OF CUTTING (EXCLUDES TOP GROWTH) AND BE FREE OF BROADLEAF WEEDS AND UNDESIRABLE COARSE AND FINE WEED GRASSES. USE ONLY FRESH, MOIST, UNHEATED. DENSE SOD. DURING THE SUMMER MONTHS, SOD SHALL BE HARVESTED, DELIVERED AND INSTALLED WITHIN A 24 HOUR PERIOD.

SPRAY–ON ADHESIVES – ON MINERAL SOILS (NOT EFFECTIVE ON MUCK SOILS). KEEP TRAFFIC OFF THESE AREAS.

TABLE 16–1: DUST CONTROL MATERIALS

MATERIAL	WATER DILUTION	TYPE OF NOZZLE	APPLY (GALLONS/ACRE)
ANIONIC ASPHALT EMULSION	7:1	COARSE SPRAY	1200
LATEX EMULSION	12.5:1	FINE SPRAY	235
RESIN IN WATER	4:1	FINE SPRAY	300
POLYACRYLAMIDE (PAM) – SPRAY ON POLYACRYLAMIDE (PAM) – DRY SPREAD	APPLY ACCORDING TO MANUFACTURER'S INSTRUCTIONS. MAY ALSO BE USED AS AN ADDITIVE TO SEDIMENT BASINS TO FLOCCULATE AND PRECIPITATE SUSPENDED COLLOIDS.		
ACIDULATED SOY BEAN SOAP STICK	NONE	COARSE SPRAY	1200

TILLAGE – TO ROUGHEN SURFACE AND BRING CLODS TO THE SURFACE. THIS IS A TEMPORARY EMERGENCY MEASURE WHICH SHOULD BE USED BEFORE SOIL BLOWING STARTS. BEGIN PLOWING ON WINDWARD SIDE OF SITE. CHISEL–TYPE PLOWS SPACED ABOUT 12 INCHES APART AND SPRING–TOOTHED HARROWS ARE EXAMPLES OF EQUIPMENT WHICH MAY PRODUCE THE DESIRED EFFECT.

SPRINKLING – SITE IS SPRINKLED UNTIL THE SURFACE IS WET.

BARRIERS – SOLID BOARD FENCES, SNOW FENCES, BURLAP FENCES, CRATE WALLS, BALES OF HAY AND SIMILAR MATERIAL CAN BE USED TO CONTROL AIR CURRENTS AND SOIL BLOWING.

STONE – COVER SURFACE WITH CRUSHED STONE OR COARSE GRAVEL.

NOTE: USING CALCIUM CHLORIDE, SYNTHETIC AND ASPHALTIC ADHESION FOR DUST CONTROL IS PROHIBITED.

SEEDING NOTES

1. WEED SEED CONTENT SHALL NOT EXCEED 0.25%.

2. THE SEED MIXTURE SHALL BE DISTRIBUTED BY MEANS OF HYDRO–SEEDING. MULCH SHALL NOT BE INCLUDED IN THE TANK WITH SEED.

3. TABLE 6–1 IS A GENERAL GUIDELINE FOR LIMESTONE APPLICATION RATES.

TABLE 6–1: LIMESTONE APPLICATION RATE BY SOIL TEXTURE

SOIL TEXTURE	TONS/ACRE	
CLAY, CLAY LOAM & HIGH ORGANIC SOIL	3	LBS./1,000 SQ. FT.
SANDY LOAM, LOAM & SILT LOAM	2	135
LOAMY SAND & SAND	1	90
		45

PERMANENT STABILIZATION

1. FOR FREE DRAINING AREAS WITH POSITIVE GRADIENTS, SEED WITH PERMANENT SEED MIX AS FOLLOWS DURING ACCEPTABLE SEEDING SEASON:

SEED MIXTURE	PLANTING RATE
HARD FESCUE	
CHEWING FESCUE	4 LBS/1000 SF
STRONG CREEPING RED FESCUE	
KENTUCKY BLUEGRASS (BLEND)	1 LBS/1000 SF
PERENNIAL RYEGRASS (BLEND)	1 LBS/1000 SF
WHITE CLOVER	.10 LBS/1000 SF

2. THE FERTILIZER SHALL BE APPLIED AT THE RATE OF 11 LBS PER 1,000 SF OF A 10–10–10 COMMERCIAL GRADE FERTILIZER UNLESS SOIL TESTING INDICATES OTHERWISE.

3. ESTABLISH PERMANENT VEGETATION BY SHOWING 80% VEGETATIVE COVERAGE OF THE SEEDED SPECIES AND MOWING ONCE.

TEMPORARY STABILIZATION

1. TEMPORARY SEEDING WILL BE USED ON ALL AREAS WHERE PERMANENT SEEDING WILL NOT BE PERFORMED OR STRAW MULCH OR EQUIVALENT WILL NOT BE APPLIED WITHIN 20 DAYS AFTER THE AREA IS DISTURBED.

SEED MIXTURE	PLANTING RATE
PERENNIAL RYEGRASS	1.0 LBS/1000 SF
SPRING OATS	2.0 LBS/1000 SF
WINTER BARLEY	2.2 LBS/1000 SF
WINTER CEREAL RYE	2.8 LBS/1000 SF

2. THE FERTILIZER SHALL BE APPLIED AT THE RATE OF 11 LBS PER 1,000 SF OF A 10–20–10 COMMERCIAL GRADE FERTILIZER UNLESS SOIL TESTING INDICATES OTHERWISE.

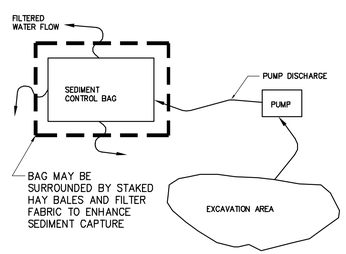

NOTES:
1. BAG MUST BE LOCATED AWAY FROM RECEIVING WATERS AND/OR CONSTRUCTION ACTIVITIES.
2. BAGS MUST BE DISPOSED OF ACCORDING TO MANUFACTURER'S INSTRUCTIONS.
3. BAGS MAY NOT BE REUSED.
4. SET BAG ON FILTER FABRIC.
5. LIMIT ONE DISCHARGE HOSE PER BAG.

1 PUMP WATER FILTER BAG
SCALE: N.T.S.

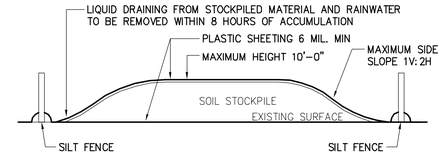

2 TEMPORARY SOIL STOCKPILE AREA
SCALE: N.T.S.

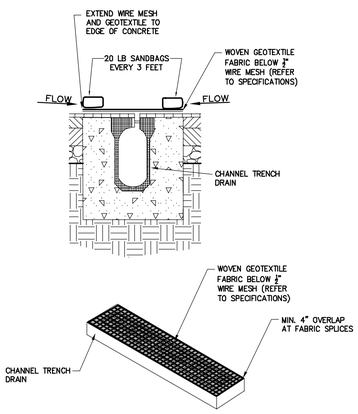

NOTES:
1. INSPECT TRENCH DRAIN PROTECTION ON A WEEKLY BASIS AND AFTER EACH RAINFALL EVENT. ALL NEEDED REPAIRS, MAINTENANCE OR REPLACEMENT SHALL BE INITIATED IMMEDIATELY AFTER THE INSPECTION.
2. REMOVE SILT ACCUMULATION WHEN DEPTH REACHES 2 INCHES.
3. CLEAN AND REPAIR TRENCH DRAIN PROTECTION TO ORIGINAL CONDITION IF EXCESSIVE PONDING OCCURS.
4. A SUPPLY OF TRENCH DRAIN PROTECTION MATERIALS SHALL BE MAINTAINED ON SITE FOR REPLACEMENT.
5. DISPOSE ACCUMULATED SEDIMENT AS WELL AS TRENCH DRAIN PROTECTION MATERIALS PROPERLY.

4 AREA TRENCH DRAIN PROTECTION DETAIL
SCALE: N.T.S.

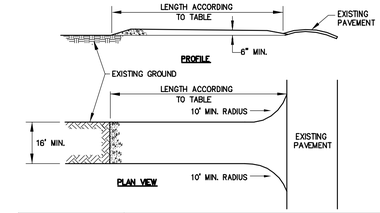

PERCENT SLOPE OF ROADWAY	LENGTH OF STONE REQUIRED	
	COARSE GRAINED SOILS	FINE GRAINED SOILS
0 TO 2%	50 FT.	100 FT.
2 TO 5%	100 FT.	200 FT.
OVER 5%	ENTIRE SURFACE STABILIZED WITH HOT MIX ASPHALT BASE COURSE, MIX I–2 (AS PRESCRIBED BY LOCAL ORDINANCE OR OTHER GOVERNING AUTHORITY)	

NOTES:
1. THE CONTRACTOR WILL BE RESPONSIBLE FOR OBTAINING ANY OFF–ROAD STORAGE OR STAGING AREAS. THE CONTRACTOR SHALL PROVIDE A STABILIZED CONSTRUCTION ENTRANCE FOR EACH OFF–ROAD STORAGE AREA.
2. STONE SIZE: ASTM C–33, SIZE NO. 2 (2½" TO 1½") OR NO. 3 (2" TO 1"), USE CLEAN CRUSHED ANGULAR STONE.
3. THE ENTRANCE SHALL BE MAINTAINED IN A CONDITION WHICH WILL PREVENT TRACKING OR FLOWING OF SEDIMENT ONTO ROADWAYS.
4. ALL SEDIMENT SPILLED, DROPPED, WASHED, OR TRACKED ONTO ROADWAYS (PUBLIC OR PRIVATE) OR OTHER IMPERVIOUS SURFACES MUST BE REMOVED IMMEDIATELY.
5. ALL OTHER ACCESS POINTS WHICH ARE NOT STABILIZED SHALL BE BLOCKED OFF.

3 STABILIZED CONSTRUCTION ENTRANCE
SCALE: N.T.S.

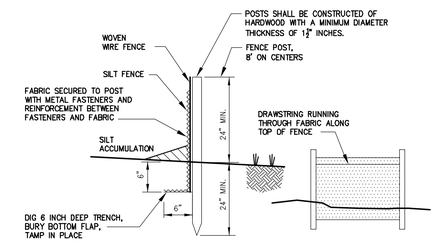

NOTES:
1. SEDIMENT SHALL BE REMOVED FROM THE UPSTREAM FACE OF THE FABRIC FENCE WHEN IT HAS REACHED A DEPTH OF ½ THE BARRIER HEIGHT.
2. REPAIR OR REPLACE THE FABRIC FENCE WHEN DAMAGED.
3. FABRIC FENCE SHALL BE INSPECTED DAILY FOR SIGNS OF DETERIORATION AND SEDIMENT REMOVAL.

5 SILT FENCE
SCALE: N.T.S.

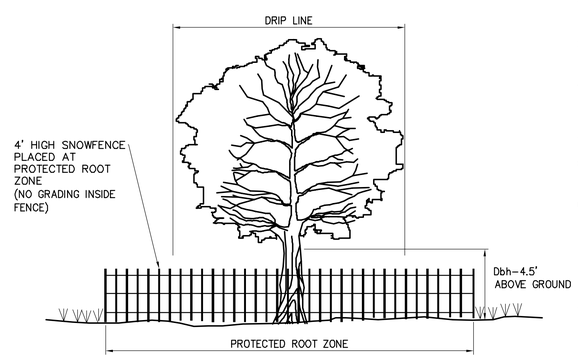

TREE PROTECTION NOTES:

1. TREE PROTECTION SHALL BE PROVIDED FOR TREES TO BE PRESERVED DURING AND AFTER CONSTRUCTION.

2. CORRECT ROOT ZONE CALCULATION AND PLACEMENT OF TREE PROTECTION IN ACCORDANCE WITH DETAIL.

3. BOX TREES WITHIN 25 FEET OF A BUILDING SITE TO PREVENT MECHANICAL INJURY. FENCING OR OTHER BARRIER SHOULD BE INSTALLED BEYOND THE CRITICAL ROOT RADIUS. TREE ROOT SYSTEMS COMMONLY EXTEND WELL BEYOND THE DRIP LINE.

4. BOARDS WILL NOT BE NAILED TO TREES DURING BUILDING OPERATIONS.

5. FEEDER ROOTS SHOULD NOT BE CUT IN AN AREA INSIDE THE PROTECTED ROOT ZONE (PRZ).

6. DAMAGED TRUNKS OR EXPOSED ROOTS SHOULD HAVE DAMAGED BARK REMOVED IMMEDIATELY AND NO PAINT SHALL BE APPLIED. EXPOSED ROOTS SHOULD BE COVERED WITH TOPSOIL IMMEDIATELY AFTER EXCAVATION IS COMPLETE. ROOTS SHALL BE PRUNED TO GIVE A CLEAN, SHARP SURFACE AMENABLE TO HEALING. ROOTS EXPOSED DURING HOT WEATHER SHOULD BE IRRIGATED TO PREVENT PERMANENT TREE INJURY. CARE FOR SERIOUS INJURY SHOULD BE PRESCRIBED BY A PROFESSIONAL FORESTER OR LICENSED TREE EXPERT.

7. TREE LIMB REMOVAL, WHERE NECESSARY, WILL BE DONE AS NATURAL TARGET PRUNING TO REMOVE THE DESIRED BRANCH AS CLOSE AS POSSIBLE TO THE BRANCH COLLAR. THERE SHOULD BE NO FLUSH CUTS. FLUSH CUTS DESTROY A MAJOR DEFENSE SYSTEM OF THE TREE. NO TREE PAINT SHALL BE APPLIED. ALL CUTS SHALL BE MADE AT THE OUTSIDE EDGE OF THE BRANCH COLLAR. CUTS MADE TOO FAR BEYOND THE BRANCH COLLAR MAY LEAD TO EXCESS SPROUTING, CRACKS AND ROT. REMOVAL OF A "V"CROTCH SHOULD BE CONSIDERED FOR FREE STANDING SPECIMEN TREES TO AVOID FUTURE SPLITTING DAMAGE.

8. ESTIMATE A TREE'S PROTECTED ROOTZONE (PRZ) BY CALCULATING THE CRITICAL ROOT RADIUS (CRR). MEASURE THE DBH (DIAMETER OF TREE AT BREAST HEIGHT, 4.5 FEET ABOVE GROUND ON THE UPHILL SIDE OF TREE) IN INCHES. MULTIPLY MEASURED DBH BY 1.5 OR 1.0. EXPRESS THE RESULT IN FEET. (DBH X 1.5: CRITICAL ROOT RADIUS FOR OLDER, UNHEALTHY, OR SENSITIVE SPECIES. DBH X 1.0: CRITICAL ROOT RADIUS FOR YOUNGER, HEALTHY OR TOLERANT SPECIES.)

6 TREE PROTECTION DETAIL
SCALE: N.T.S.

Drawing Copyright © 2015

CHA
6 Campus Drive
Parsippany, NJ 07054-4406
973.538.3320 • www.chacompanies.com

IT IS A VIOLATION OF LAW FOR ANY PERSON, UNLESS THEY ARE ACTING UNDER THE DIRECTION OF A LICENSED PROFESSIONAL ENGINEER, ARCHITECT, LANDSCAPE ARCHITECT OR LAND SURVEYOR TO ALTER AN ITEM IN ANY WAY. IF AN ITEM BEARING THE STAMP OF A LICENSED PROFESSIONAL ENGINEER, ARCHITECT, LANDSCAPE ARCHITECT OR LAND SURVEYOR SHALL STAMP THE DOCUMENT AND INCLUDE THE NOTATION "ALTERED BY" FOLLOWED BY THEIR SIGNATURE, THE DATE OF SUCH ALTERATION, AND A SPECIFIC DESCRIPTION OF THE ALTERATION.

PIONEERS

WILLIAM PATERSON UNIVERSITY

SOCCER FIELD IMPROVEMENTS

300 POMPTON RD.
WAYNE, NJ 07470

No.	Submittal / Revision	App'd.	By	Date
1	CONSTRUCTION DOCUMENTS			01/11/16

SOIL EROSION AND SEDIMENT CONTROL DETAILS AND NOTES

Designed By:	Drawn By:	Checked By:
XXX	XXX	XXX
Issue Date: 01/11/2016	Project No: 30059	Scale: AS SHOWN

Drawing No.:
SE-102

File: V:\PROJECTS\ANY\K4\30059\CADD_ACAD\SE102-30059.DWG
Saved: 1/13/2016 2:02:34 PM Plotted: 1/13/2016 2:31:43 PM Current User: Merkelin, Tim LastSaveby: 4420

ABBREVIATIONS

A	AMPERE
AC	ALTERNATING CURRENT
AF	AMPERE FRAME
AFF/G	ABOVE FINISHED FLOOR/GRADE
AIC	AMPERE INTERRUPTING CAPACITY
AT	AMPERE TRIP
AUX	AUXILIARY
A/V	AUDIBLE/VISUAL
AWG	AMERICAN WIRE GAUGE
BB	BACKBOARD
BCW	BARE COPPER WIRE
BATT	BATTERY
BTM	BOTTOM
BKR	BREAKER
BLDG	BUILDING
C	CONDUIT
CAB	CABINET
CATV	COMMUNITY ACCESS TELEVISION (CABLE TELEVISION)
CB	CIRCUIT BREAKER
CIR	CIRCUIT
CKT	CIRCUIT
℄	CENTER LINE
CO	COMPANY
COMM	COMMUNICATIONS
CONN	CONNECTION, CONNECT
CUH	CABINET UNIT HEATER
CT	CURRENT TRANSFORMER
CU	COPPER
CWA	CONSTANT WATTAGE AUTOTRANSFORMER
△	DELTA CONNECTION
D	DEEP
DB	DECIBEL
DET	DETECTOR
DIA	DIAMETER
DISC	DISCONNECT
DIST	DISTRIBUTION
DIV	DIVISION
DN	DOWN
DWG	DRAWING
EA	EACH
EBH	ELECTRIC BASEBOARD HEATER
EF	EXHAUST FAN
EL	ELEVATION
ELEC	ELECTRIC(AL)
EMER	EMERGENCY
ENCL	ENCLOSURE
EQUIP	EQUIPMENT
EWC	ELECTRIC WATER COOLER
EXT	EXTERIOR
F	FUSE(D)
FA	FIRE ALARM
FACP	FIRE ALARM CONTROL PANEL
FC	FOOTCANDLES
FIXT	FIXTURE
FLR	FLOOR
FLUOR	FLUORESCENT
FT	FOOT (FEET)
FUT	FUTURE
G, GND	GROUND
GALV	GALVANIZE(D)
GC	GENERAL CONTRACTOR
GFI	GROUND FAULT CIRCUIT INTERRUPTER
GFP	GROUND FAULT PROTECTION
HD	HEAVY DUTY
HGT	HEIGHT
HID	HIGH INTENSITY DISCHARGE
HO	HIGH OUTPUT
HOA	HAND-OFF-AUTOMATIC
HP	HORSEPOWER
HPF	HIGH POWER FACTOR
HPS	HIGH PRESSURE SODIUM
HTR	HEATER
HV	HIGH VOLTAGE
HW	HOT WATER
ID	IDENTIFY, IDENTIFICATION
INCAND	INCANDESCENT
J-BOX	JUNCTION BOX
J.C.	JANITOR CLOSET
JCT	JUNCTION
KCM/Kcmil	THOUSAND CIRCULAR MILS
KVA	KILO VOLT AMPERE
KW	KILOWATT
LGT	LIGHTING
LT(S)	LIGHT(S)
LED	LIGHT EMITTING DIODE
L	LOUVER
MAX	MAXIMUM
MCB	MAIN CIRCUIT BREAKER
MC	METAL CLAD CABLE
MFR	MANUFACTURER
MH	METAL HALIDE
MECH	MECHANICAL
MIN	MINIMUM
ML	MOTORIZED LOUVER
MLO	MAIN LUGS ONLY
MT	MOUNT
MTD	MOUNTED
MTR	MOTOR
N	NORTH
NEC	NATIONAL ELECTRICAL CODE
NF	NON-FUSED
NL	NIGHT LIGHT
No/#	NUMBER
OC	OVER COUNTER
OL	OVERLOAD
P	POLE(S)
PA	PUBLIC ADDRESS
PNL	PANEL
PR	PAIR
PRI	PRIMARY
PWR	POWER
ø	PHASE
PT	PRESSURE TREATED
RECEPT	RECEPTACLE
RGS	RIGID GALVANIZED STEEL
RM	ROOM
SEC	SECONDARY
SH	SHIELDED
SPKR	SPEAKER
SW	SWITCH
TEMP	TEMPORARY/TEMPERATURE
T-STAT	THERMOSTAT
TB	TERMINAL BOARD
TYP	TYPICAL
UH	UNIT HEATER
UON	UNLESS OTHERWISE NOTED
V	VOLT, VOLTS
VA	VOLT-AMPERES
W	WATT, WIRE
W/	WITH
WP	WEATHERPROOF
XFMR/T	TRANSFORMER
Y	WYE CONNECTION

LIGHTING

REFER TO LIGHTING FIXTURE SCHEDULE FOR TYPE, LAMP, BALLAST, POWER REQUIREMENTS, MOUNTING HEIGHT AND MANUFACTURER.

SITE LIGHT

RACEWAYS

- CONDUIT CONCEALED OR EXPOSED AS SPECIFIED
- CONDUIT TURNING UP
- CONDUIT TURNING DOWN
- PP-1 1/3/5 — HOMERUN BACK TO PANEL (PANEL AND CIRCUITS INDICATED)
- CIRCUIT CONTINUED OR CONNECTED TO EQUIPMENT AS INDICATED
- UNDERGROUND CONDUIT
- GROUND CONDUCTOR
- GROUNDING CONDUCTOR TERMINATION POINT AT SERVICE EQUIPMENT
- INDICATES EXISTING DEVICES OR EQUIPMENT

DEVICES AND APPURTENANCES

- SINGLE POLE TOGGLE SWITCH
- DUPLEX RECEPTACLE
- TWO – 20 AMP DUPLEX RECEPTACLES UNDER SINGLE COVER
- HARDWARE EQUIPMENT CONNECTION
- GROUND ROD 5/8" X 10'-0" COPPER CLAD
- J — JUNCTION BOX

ONE LINE DIAGRAMS

- POWER TRANSFORMER
- AMPS FRAME — 400AF, AMPS TRIP — 400AT, NR. of POLES — 3P, GFP — MOLDED CASE CIRCUIT BREAKER W/GROUND FAULT PROTECTION
- SAFETY DISCONNECT SWITCH – UNFUSED
- CONNECTED CONDUCTORS
- CROSSING OF CONDUCTORS NOT CONNECTED
- NORMALLY OPEN CONTACT/RELAY
- NORMALLY CLOSED CONTACT/RELAY
- CURRENT TRANSFORMER
- FUSE
- TR — TIME RELAY
- 1 — CIRCUIT TAG REFER TO CONDUIT AND CONDUCTOR SCHEDULE
- GROUNDING CONNECTION
- FUSED DISCONNECT SWITCH AND/OR BOLT PRESSURE SWITCH
- METER — METER ASSEMBLY
- POTENTIAL TRANSFORMER
- 3 — MOTOR
- INDICATES EQUIPMENT ENCLOSURE

POWER DISTRIBUTION EQUIPMENT

- SURFACE MOUNTED BRANCH CIRCUIT PANELBOARD 208/120V, 3ø, 4W, UON
- 480/277 — SURFACE MOUNTED BRANCH CIRCUIT PANELBOARD 480/277V, 3ø, 4W, UON
- DISTRIBUTION PANEL
- 30/3 — NON-FUSED SAFETY SWITCH DISCONNECT RATING/POLES
- 30/3/15 — FUSIBLE SAFETY SWITCH DISCONNECT RATING/POLES/FUSE RATING
- TRANSFORMER
- T, 1, X, EF-1 — ELECTRIC MOTOR (DESIGNATION INDICATED) NUMBER INDICATES HORSEPOWER

GENERAL

- # — NUMBER IN CIRCLE, WITH OR WITHOUT ARROW OR LEADER, REFER TO MATCHING NUMBERED CODED NOTE
- # — NUMBER IN DIAMOND, WITH OR WITHOUT ARROW OR LEADER; REFER TO THE DEMOLITION CODED NOTE WITH THE MATCHING NUMBER
- X / XXX — DETAIL CALLOUT

GENERAL NOTES

1. REFER TO CIVIL, STRUCTURAL, ARCHITECTURAL, MECHANICAL, PLUMBING, AND FOOD SERVICE DRAWINGS FOR SYMBOLS ASSOCIATED WITH WORK, EQUIPMENT, ETC. BY OTHER(S).
2. ALL WORK SHOWN ON THE ELECTRICAL DRAWINGS SHALL BE BY THE ELECTRICAL CONTRACT UNLESS OTHERWISE INDICATED.
3. COORDINATE WORK WITH ALL TRADES. MECHANICAL
4. CONDUIT RUNS SHOWN ARE DIAGRAMMATIC UON. EXACT LOCATION OF ALL CONDUIT RUNS SHALL BE DETERMINED IN THE FIELD. COORDINATE INSTALLATIONS AND AVOID CONFLICT WITH PIPING, DUCTWORK, ACCESS DOORS AND WORK BY OTHER TRADES.
5. GENERAL NOTES APPLY TO ALL ELECTRICAL CONTRACT DRAWINGS.

Drawing Copyright © 2015

CHA
6 Campus Drive
Parsippany, NJ 07054-4406
973.538.2325 - www.chacompanies.com

IT IS A VIOLATION OF LAW FOR ANY PERSON, UNLESS THEY ARE ACTING UNDER THE DIRECTION OF A LICENSED PROFESSIONAL ENGINEER, ARCHITECT, LANDSCAPE ARCHITECT OR LAND SURVEYOR TO ALTER AN ITEM IN ANY WAY. IF AN ITEM BEARING THE STAMP OF A LICENSED PROFESSIONAL IS ALTERED, THE ALTERING ENGINEER, ARCHITECT, LANDSCAPE ARCHITECT OR LAND SURVEYOR SHALL STAMP THE DOCUMENT AND INCLUDE THE NOTATION "ALTERED BY" FOLLOWED BY THEIR SIGNATURE, THE DATE OF SUCH ALTERATION, AND A SPECIFIC DESCRIPTION OF THE ALTERATION.

PIONEERS

WILLIAM PATERSON UNIVERSITY

SOCCER FIELD IMPROVEMENTS

300 POMPTON RD.
WAYNE, NJ 07470

No.	Submittal / Revision	App'd.	By	Date
1	CONSTRUCTION DOCUMENTS			01/11/16

ELECTRICAL LEGEND, ABBREVIATIONS AND SYMBOLS

Designed By:	Drawn By:	Checked By:
SR	LH	JD
Issue Date: 01/11/2016	Project No: 30059	Scale: AS SHOWN

Drawing No.:

E-001

File: V:\PROJECTS\ANY\K4\30059\CADD_ACAD\E-001-30059.DWG
Saved: 12/11/2015 3:02:51 PM Plotted: 1/13/2016 1:51:39 PM Current User: Merklein, Tim LastSavedBy: 3512

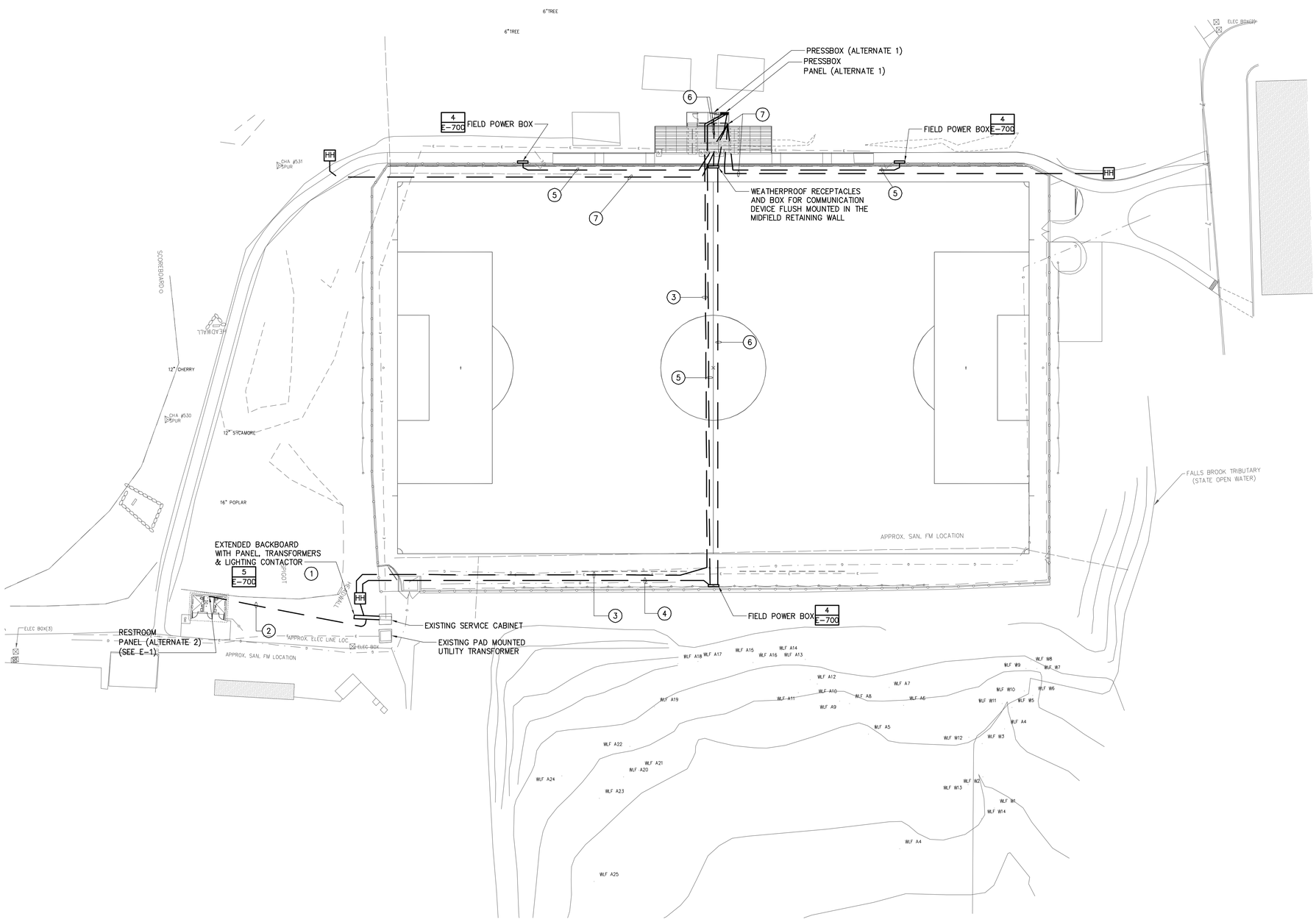

ELECTRICAL SITE POWER PLAN

1" = 30'-0"

CODED NOTES

1. EXTEND EXISTING CONCRETE PAD AND BACKBOARD, AND PROVIDE 480V 3PH 150A MCB POWER PANEL PP IN NEMA 3R ENCLOSURE AND TRANSFORMERS AS PER ONE-LINE DIAGRAM ON DWG. E-600, LIGHTING CONTACTOR WITH TIMER, PHOTOCELL AND H-O-A SELECTOR SWITCH. PROVIDE 2"C, (3)#1/0, (1)#6G FROM PP PANEL AND TIE INTO SECONDARY SERVICE FEED IN THE EXISTING PULL BOX. CURRENT DESIGN IS BASED ON ASSUMPTION. CLIENT TO CONFIRM INFORMATION PRIOR TO PROJECT BEING ISSUED FOR CONSTRUCTION.
2. PROVDE 25KVA 480V-208/120V 1PH 3W TRANSFORMER AND 1-1/2" PVC SCH 40 WITH (3)#2 AND (1)#6G FOR RESTROOM 100A PANEL.
3. PROVDE 25KVA 480V-208/120V 1PH 3W TRANSFORMER AND 1-1/2" PVC SCH 40 WITH (3)#2 AND (1)#6G FOR RESTROOM 100A PANEL.
4. 1" CONDUIT WITH (2)#8 AND (1)#8G TO ELECTRICAL ENCLOSURE WITH TWO DUPLEX WEATHERPROOF GFCI RECEPTACLES.
5. 1" CONDUIT WITH (2)#8 AND (1)#8G TO ELECTRICAL ENCLOSURE WITH TWO DUPLEX WEATHERPROOF GFCI RECEPTACLES.
6. 2" CONDUIT WITH PULL WIRE FOR FUTURE COMMUNICATION WIRING. STUD UP IN PRESS BOX IT ROOM.
7. TWO 2" CONDUITS WITH PULL WIRE FOR FUTURE POWER AND COMMUNICATION WIRING. STUD UP IN PRESS BOX IT ROOM.

Drawing Copyright © 2015

CHA
6 Campus Drive
Parsippany, NJ 07054-4406
973.539.2125 - www.chacompanies.com

IT IS A VIOLATION OF LAW FOR ANY PERSON, UNLESS THEY ARE ACTING UNDER THE DIRECTION OF A LICENSED PROFESSIONAL ENGINEER, ARCHITECT, LANDSCAPE ARCHITECT OR LAND SURVEYOR TO ALTER AN ITEM IN ANY WAY. IF AN ITEM BEARING THE STAMP OF A LICENSED PROFESSIONAL IS ALTERED, THE ALTERING ENGINEER, ARCHITECT, LANDSCAPE ARCHITECT OR LAND SURVEYOR SHALL STAMP THE DOCUMENT AND INCLUDE THE NOTATION "ALTERED BY" FOLLOWED BY THEIR SIGNATURE, THE DATE OF SUCH ALTERATION, AND A SPECIFIC DESCRIPTION OF THE ALTERATION.

PIONEERS

WILLIAM PATERSON UNIVERSITY

SOCCER FIELD IMPROVEMENTS

300 POMPTON RD.
WAYNE, NJ 07470

No.	Submittal / Revision	App'd.	By	Date
1	CONSTRUCTION DOCUMENTS			01/11/16

ELECTRICAL SITE POWER PLAN

Designed By:	Drawn By:	Checked By:
SR	LH	JD
Issue Date: 01/11/2016	Project No: 30059	Scale: AS SHOWN

Drawing No.:

E-100

File: V:\PROJECTS\ANY\K4\30059\CADD_ACAD\E-100-30059.DWG
Saved: 1/13/2016 8:48:25 AM Plotted: 1/13/2016 1:55:57 PM Current User: Merklein, Tim LastSavedBy: 3840

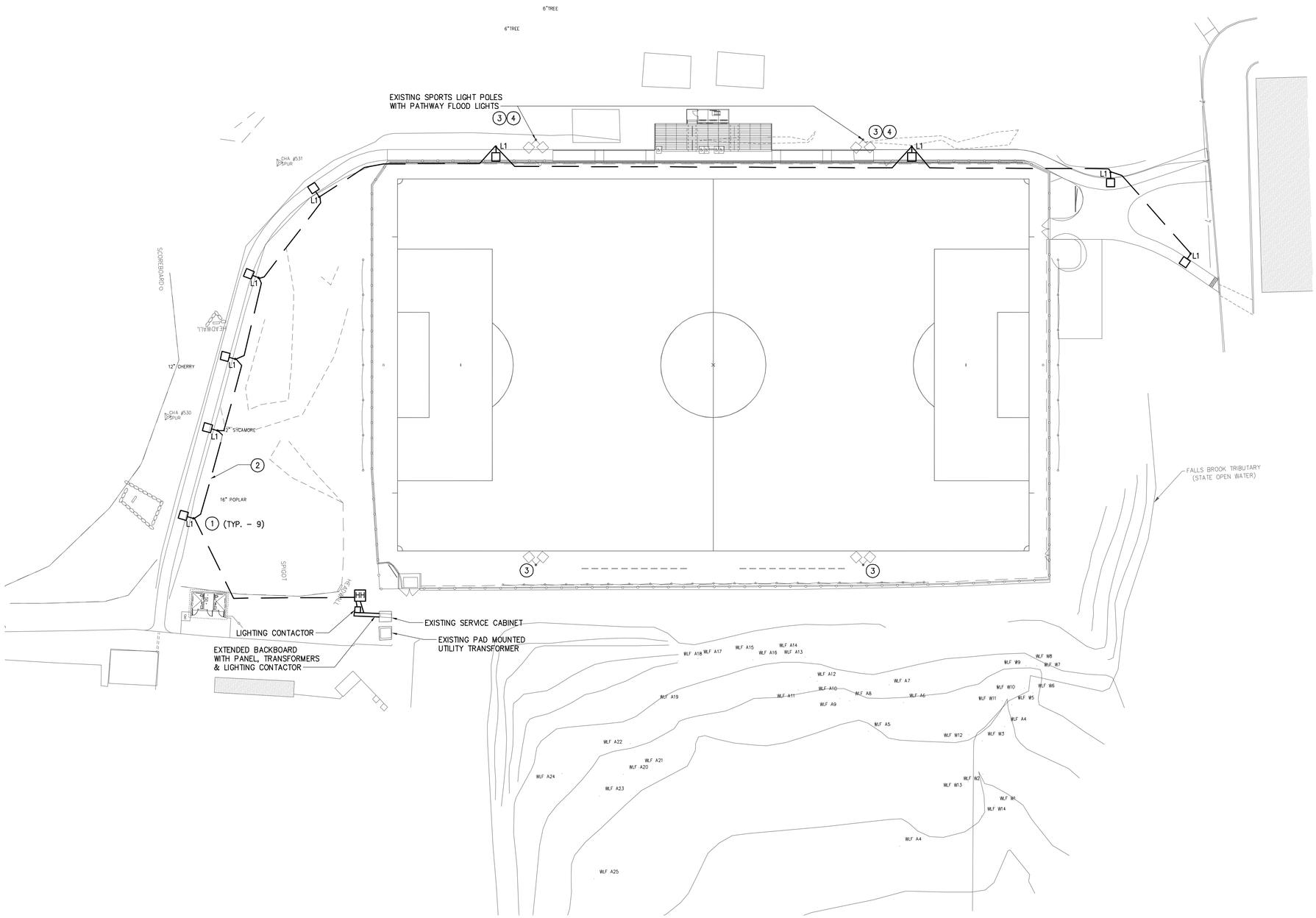

ELECTRICAL SITE LIGHTING PLAN

1" = 30'-0"

CODED NOTES

1. PROVIDE LIGHT POLES WITH TYPE L1 AND L2 KIM LIGHTING LED LUMINAIRES TO MATCH CAMPUS WIDE LIGHT POLES. REFER TO LUMINAIRE DATA SHEET ON DWG E-500 FOR LUMINAIRES DESCRIPTION.
2. 1" CONDUIT WITH (2)#6 AND (1)#10G FOR CIRCUIT TO SUPPORT TYPE L1 AND L2 LIGHT POLES FROM LIGHTING CONTACTOR.
3. MUSCO TO PROVIDE REPLACEMENT OF BALLASTS AND CAPACITORS FOR SPORTS LIGHTING POLES (16 BALLASTS PER EACH POLE). (ADD ALT. ITEM).
4. REMOVE THE EXISTING HID FLOOD LIGHT MOUNTED ON SIDE OF BALLAST BOX ON EACH OF MUSCO SPORT LIGHT POLE. EXISTING FLOOD LIGHT MOUNTED ON THE TOP OF BALLAST BOX TO REMAIN. PROVIDE TWO LED PATHWAY FLOOD LIGHTS PER POLE, COOPER S2030L SERIES, OR APPROVED EQUAL. PROVIDE POLE MOUNTING BRACKET AND RECONNECT TO THE EXISTING CIRCUIT. FIELD ADJUST LIGHTS TO AIM TOWARDS PATHWAY. CURRENT DESIGN IS BASED ON ASSUMPTION. CLIENT TO CONFIRM INFORMATION PRIOR TO PROJECT BEING ISSUED FOR CONSTRUCTION. CONTACT MUSCO REPRESENTATIVE TO CONFIRM INSTALLATION OF ADDITIONAL LUMINAIRES ON THE EXISTING SPORTS LIGHTING POLES.

Drawing Copyright © 2015

CHA
6 Campus Drive
Parsippany, NJ 07054-4406
973.538.2125 - www.chacompanies.com

IT IS A VIOLATION OF LAW FOR ANY PERSON, UNLESS THEY ARE ACTING UNDER THE DIRECTION OF A LICENSED PROFESSIONAL ENGINEER, ARCHITECT, LANDSCAPE ARCHITECT OR LAND SURVEYOR TO ALTER AN ITEM IN ANY WAY. IF AN ITEM BEARING THE STAMP OF A LICENSED PROFESSIONAL ENGINEER, ARCHITECT, LANDSCAPE ARCHITECT OR LAND SURVEYOR SHALL STAMP THE DOCUMENT AND INCLUDE THE NOTATION "ALTERED BY" FOLLOWED BY THEIR SIGNATURE, THE DATE OF SUCH ALTERATION, AND A SPECIFIC DESCRIPTION OF THE ALTERATION.

PIONEERS

WILLIAM PATERSON UNIVERSITY

SOCCER FIELD IMPROVEMENTS

300 POMPTON RD.
WAYNE, NJ 07470

No.	Submittal / Revision	App'd.	By	Date
1	CONSTRUCTION DOCUMENTS			01/11/16

ELECTRICAL SITE LIGHTING PLAN

Designed By:	Drawn By:	Checked By:
SR	LH	JD
Issue Date:	Project No:	Scale:
01/11/2016	30059	AS SHOWN

Drawing No.:

E-200

File: V:\PROJECTS\ANY\K4\30059\CADD_ACAD\E-200-30059.DWG
Saved: 1/13/2016 9:12:58 AM Plotted: 1/13/2016 1:56:08 PM Current User: Merklein, Tim LastSavedBy: 3840

LIGHTING FIXTURE SCHEDULE

SYMBOL	TAG	TYPE	DISCRIPTION	MOUNTING	LAMP(S)	BALLAST(S) [INPUT WATTS]	VOLTS	MANUFACTURER & CATALOG NUMBER	COMMENTS
	L3	LED	6" LED DOWNLIGHT	RECESSED IN CEILING/CANOPY	(1) 10W LED	10W	120	UNIVERSAL 120–277V. PROVIDE LED BULB, PROVED ACRYLIC LENS ENCLOSURE	ALTERNATE 2
	L4	LED	LED FLOOD LIGHT WITH CUT OFF; 5000K	WALL	(1) 30W LED	30W	120	COOPER LIGHTING F–S–L2030L	ALTERNATE 2
	L5	LED	1'X4' LED SURFACE MOUNTED WRAP AROUND	CEILING	65W LED	65W	120	COOPER LIGHTING–METALUX 4WNLED–LD1–54–F–UNV–L835–CD1–U	ALTERNATE 2
EM–1	EX	LED	EMERGENCY LIGHT WITH BATTERY PACK	SURFACE	(2) 12W LED	24W	120	LITHONIA IND124 H1212 OR APPROVED EQUAL	ALTERNATE 2
	L1	LED	17' SITE LIGHT POLE WITH TOP MOUNT LUMINAIRE AND ROUND ALUMINUM NON–TAPERED POLE, DARK BRONZE	POLE	(60) LED	64W	120	KIM LIGHTING; CC21–LEDPB SERIES CAT#: CC21P2E35–A–120L4K277–DB–5.00 KIM LIGHTING POLE CAT#: PRA16–34188–FM–DB	ALTERNATE 3: PROVIDE 17' POLE, POLE BASE AND LUMINAIRE TO MATCH EXISTING

LOCATION: RESTROOM UTILITY CLOSET
MOUNTING: SURFACE
SOURCE: 25KVA XFMR

PANEL ID: LVP–1

VOLTS, PHASE, WIRE: 208/120V 2PH 3W
MAINS: 100A MLO
SHORT CIRCUIT RATING: 14 KAIC

CKT	LOAD DESCRIPTION	CB AMPS/ POLE	CONN LOAD KVA	CONN LOAD KVA	CONN LOAD KVA	CONN LOAD KVA	CB AMPS/ POLE	LOAD DESCRIPTION	CKT
1	ELECTRIC WATER HEATER EWH–1	30/2	2.5			1.0	20/2	ELECTRIC HEATER, CH–1	2
3				2.5	1.0				4
5	OUTDOOR GRINDER PUMP	20/2	0.96			1.0	20/2	ELECTRIC HEATER, CH–2	6
7				0.96	1.0				8
9	EXTERIOR LIGHTING	20/1	0.09			0.95	20/2	ELECTRIC UNIT HEATER, EUH–1	10
11	BATHROOM LIGHTING AND EF–1	20/1		0.19	0.95				12
13	BATHROOM LIGHTING AND EF–2	20/1	0.19			0.18	20/1	BATHROOM RECEPTACLE	14
15	UTILITY CLOSET LIGHTING	20/1		0.13	0.18		20/1	BATHROOM RECEPTACLE	16
17	EMERGENCY LIGHTING	20/1	0.018			0.5	20/1	HAND DRYER	18
19	EXTERIOR GFI RECEPTACLES	20/1		0.54	0.5		20/1	HAND DRYER	20
21	SPARE	20/1					20/1	SPARE	22
23	SPARE	20/1					20/1	SPACE	24
25	SPACE	20/1					20/1	SPACE	26
27	SPACE	20/1					20/1	SPACE	28
29	SPACE	20/1					20/1	SPACE	30
			3.76	4.32	3.63	3.63			
			TOTAL kVA						
			15.34						

RESTROOM POWER OUTLET SCHEDULE – ARCHITECTURAL, HVAC & PLUMBING LOADS (ALTERNATE 2)

TAG	DESCRIPTION	LOCATION	LOAD	VOLTAGE	PHASE	FLA	KVA	FED FROM	O.C. DEVICE	FEEDER/BRANCH CIRCUIT	CONTROLLER	DISCONNECT	REMARKS
CH–1	ELECTRIC CABINET HEATER	WALL MOUNTED	2 KW	208	1	9.6A	2	LVP–1/2,4	20/2	3/4"C, (2)#12, (1)#12G	THERMOSTAT INTEGRAL WITH UNIT	INTEGRAL WITH UNIT	
CH–2	ELECTRIC CABINET HEATER	WALL MOUNTED	2 KW	208	1	9.6A	2	LVP–1/6,8	20/2	3/4"C, (2)#12, (1)#12G	THERMOSTAT INTEGRAL WITH UNIT	INTEGRAL WITH UNIT	
EUH–1	ELECTRIC UNIT HEATER	CEILING MOUNTED	1.9 KW	208	1	9.1A	1	LVP–1/22	20/2	3/4"C, (2)#12, (1)#12G	THERMOSTAT INTEGRAL WITH UNIT	FURNISHED WITH UNIT	
EWH–1	ELECTRIC WATER HEATER	PLATFORM 6' AFF	5 KW	208	1	24A	5	LVP–1/1,3	30/2	3/4"C, (2)#10, (1)#10G	THERMOSTAT INTEGRAL WITH UNIT	INTEGRAL WITH UNIT	PROVIDED BY OTHERS
EF–1	EXHAUST FAN	CEILING	0.061 KW	120	1	0.51A	0.061			3/4"C, (2)#12, (1)#12G	CONTROLLED BY LIGHTING OCCUPANCY SENSOR SWITCH	INTEGRAL WITH UNIT	CONNECTED TO THE LIGHTING CIRCUIT
EF–2	EXHAUST FAN	CEILING	0.061 KW	120	1	0.51A	0.061			3/4"C, (2)#12, (1)#12G	CONTROLLED BY LIGHTING OCCUPANCY SENSOR SWITCH	INTEGRAL WITH UNIT	CONNECTED TO THE LIGHTING CIRCUIT
GP–1	GRINDER PUMP	OUTDOOR	1 HP	208	1	9.2A	1.92	LVP–1/5,7	20/2	3/4"C (2)#12, (1)#12G		DISCONNECT SWITCH IN NEMA 3R ENCLOSURE	PROVIDED BY OTHERS
HD–1	HAND DRYER	WALL	2.3 KW	120	1	19.2A	2.3	LVP–1/20	25/1	3/4"C, (2)#10, (1)#10G	INTEGRAL WITH UNIT	INTEGRAL WITH UNIT	
HD–2	HAND DRYER	WALL	2.3 KW	120	1	19.2A	2.3	LVP–1/18	25/1	3/4"C, (2)#10, (1)#10G	INTEGRAL WITH UNIT	INTEGRAL WITH UNIT	

Drawing Copyright © 2015

CHA
6 Campus Drive
Parsippany, NJ 07054-4406
973.539.2325 - www.chacompanies.com

IT IS A VIOLATION OF LAW FOR ANY PERSON, UNLESS THEY ARE ACTING UNDER THE DIRECTION OF A LICENSED PROFESSIONAL ENGINEER, ARCHITECT, LANDSCAPE ARCHITECT OR LAND SURVEYOR TO ALTER AN ITEM IN ANY WAY. IF AN ITEM BEARING THE STAMP OF A LICENSED PROFESSIONAL IS ALTERED, THE ALTERING ENGINEER, ARCHITECT, LANDSCAPE ARCHITECT OR LAND SURVEYOR SHALL STAMP THE DOCUMENT AND INCLUDE THE NOTATION "ALTERED BY" FOLLOWED BY THEIR SIGNATURE, THE DATE OF SUCH ALTERATION, AND A SPECIFIC DESCRIPTION OF THE ALTERATION.

PIONEERS

WILLIAM PATERSON UNIVERSITY

SOCCER FIELD IMPROVEMENTS

300 POMPTON RD.
WAYNE, NJ 07470

No.	Submittal / Revision	App'd.	By	Date
1	CONSTRUCTION DOCUMENTS			01/11/16

ELECTRICAL LIGHTING AND EQUIPMENT SCHEDULES, WIRING DIAGRAMS

Designed By:	Drawn By:	Checked By:
SR	LH	JD
Issue Date: 01/11/2016	Project No: 30059	Scale: AS SHOWN

Drawing No.:
E-500

File: V:\PROJECTS\ANY\K4\30059\CADD_ACAD\E-500-30059.DWG
Saved: 1/13/2016 9:55:03 AM Plotted: 1/13/2016 1:57:36 PM Current User: Merklein, Tim LastSavedBy: 3840

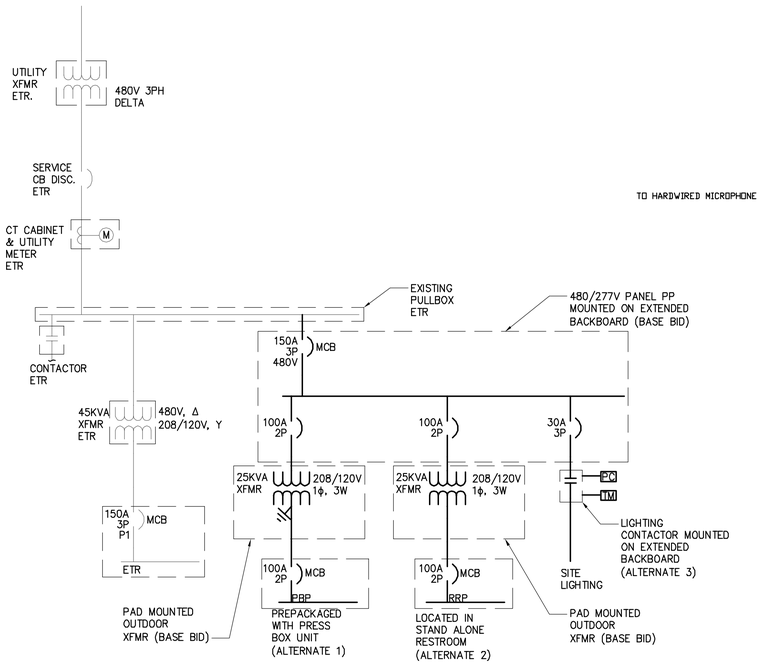

ELECTRICAL ONE-LINE DIAGRAM
NOT TO SCALE

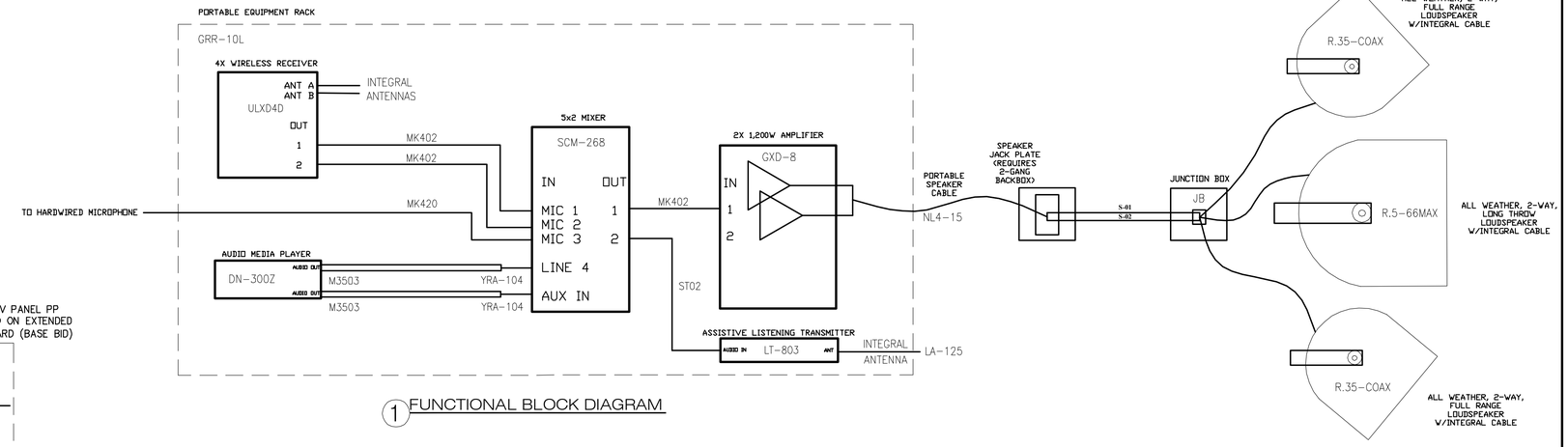

1 FUNCTIONAL BLOCK DIAGRAM

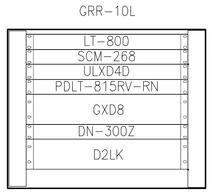

10RU PORTABLE RACK WITH LOCKING FRONT & REAR PANELS

ASSISTIVE LISTENING TRANSMITTER

5 X 2 MIXER

2X WIRELESS RECEIVER

POWER DISTRO

2 X 1,200W AMPLIFIER W/ 2X2 DSP

MEDIA PLAYER & RECEIVERS

STORAGE DRAWER

EMPTY SPACE (FOR CABLE ACCESS)

2 RACK ELEVATIONS
NOT TO SCALE

ELECTRICAL CONTRACTOR TO PROVIDE DEDICATED 15AMP CIRCUIT WITH DUPLEX OUTLET LOCATED NEAR EQUIPMENT RACK

3 POWER NOTES

ALL FIELD LOCATIONS AND MOUNTING METHODS TO BE FIELD DETERMINED BY SOUND SUBCONTRACTOR AND ENGINEER

4 INSTALLATION NOTES

LABEL	DESCRIPTION	EXAMPLE
A-XX	1 PAIR - AUDIO WIRE - 22AWG STRANDED, SHIELDED	BELDEN 9451 (PROVIDED)
S-XX	1 PAIR - SPEAKER WIRE - 12AWG STRANDED, UNSHIELDED	WHIRLWIND W12GA (PROVIDED)
WLM-X	1 PAIR - WIRELESS ANTENNA WIRE - RG-58 (INTEGRAL)	SHURE UA802 (PROVIDED)
ALS-X	1 - ASSISTIVE LISTENING ANTENNA - RG-59 (INTEGRAL)	LISTEN LA-125 (PROVIDED)

5 WIRE KEY

GENERAL NOTES

1. ALL WORK SHOWN ON THIS DWG SHALL BE PROVIDED BY ELECTRICAL CONTRACTOR. PROVIDE ALL EQUIPMENT, WIRING BOXES, MOUNTING HARDWARE FOR A COMPLETE SYSTEM. WHEN INSTALLATION AND TESTING IS COMPLETE CONTRACTOR SHALL DEMONSTRATE SYSTEM OPERATION TO OWNER.
2. SPEAKERS SHALL BE MOUNTED ON FRONT OF PRESSBOX AS HIGH AS POSSIBLE.

1 PRESSBOX PA SYSTEM BLOCK DIAGRAM (ALTERNATE 1)
NOT TO SCALE

Drawing Copyright © 2015

CHA
6 Campus Drive
Parsippany, NJ 07054-4406
973.538.2325 - www.chacompanies.com

IT IS A VIOLATION OF LAW FOR ANY PERSON, UNLESS THEY ARE ACTING UNDER THE DIRECTION OF A LICENSED PROFESSIONAL ENGINEER, ARCHITECT, LANDSCAPE ARCHITECT OR LAND SURVEYOR TO ALTER AN ITEM IN ANY WAY. IF AN ITEM BEARING THE STAMP OF A LICENSED PROFESSIONAL IS ALTERED, THE ALTERING ENGINEER, ARCHITECT, LANDSCAPE ARCHITECT OR LAND SURVEYOR SHALL STAMP THE DOCUMENT AND INCLUDE THE NOTATION "ALTERED BY" FOLLOWED BY THEIR SIGNATURE, THE DATE OF SUCH ALTERATION, AND A SPECIFIC DESCRIPTION OF THE ALTERATION.

PIONEERS

WILLIAM PATERSON UNIVERSITY

SOCCER FIELD IMPROVEMENTS

300 POMPTON RD.
WAYNE, NJ 07470

No.	Submittal / Revision	App'd.	By	Date
1	CONSTRUCTION DOCUMENTS			01/11/16

ELECTRICAL ONE-LINE DIAGRAM

Designed By:	Drawn By:	Checked By:
SR	LH	JD
Issue Date: 01/11/2016	Project No: 30059	Scale: AS SHOWN

Drawing No.:
E-600

File: V:\PROJECTS\ANY\K4\30059\CADD_ACAD\E-600-30059.DWG
Saved: 1/13/2016 9:14:23 AM Plotted: 1/13/2016 1:58:58 PM Current User: Merklein, Tim LastSavedBy: 3840

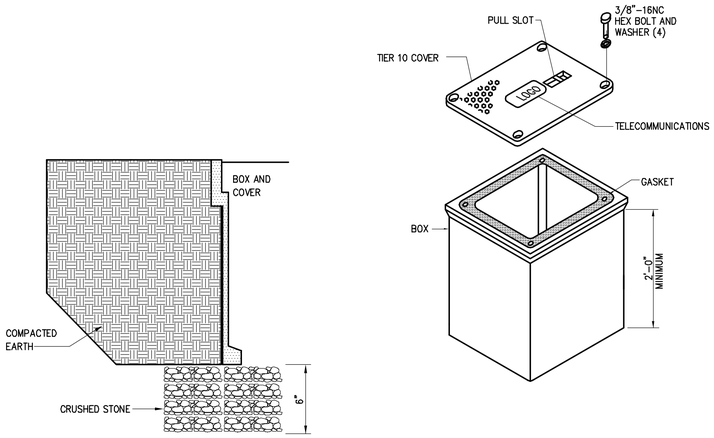

NOTES
1. SIZE HANDHOLE AT EACH LOCATION PER NEC. MINIMUM SIZE SHALL BE 18" x 18" x 24".
2. ALL CONDUITS SHALL BE PROVIDED WITH A PULL ROPE.
3. REPLACE EXISTING SURFACE CONDITIONS IN KIND TO INCLUDE, BUT NOT LIMITED TO: CONCRETE, CRUSHED STONE, SELECT GRAVEL, ASPHALT CONCRETE, TOPSOIL AND GRASS.
4. PROVIDE DIVIDED HANDHOLE TO SEPARATE POWER WIRING FROM COMMUNICATION AND SPEAKER WIRING.

1 HANDHOLE – DETAIL
– NOT TO SCALE

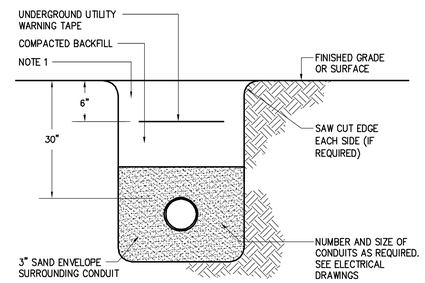

NOTE
1. REPLACE EXISTING SURFACE CONDITIONS IN KIND TO INCLUDE, BUT NOT LIMITED TO: CONCRETE, CRUSHED STONE, SELECT GRAVEL, ASPHALT, TOPSOIL AND GRASS.

2 UNDERGROUND CONDUIT
– NOT TO SCALE

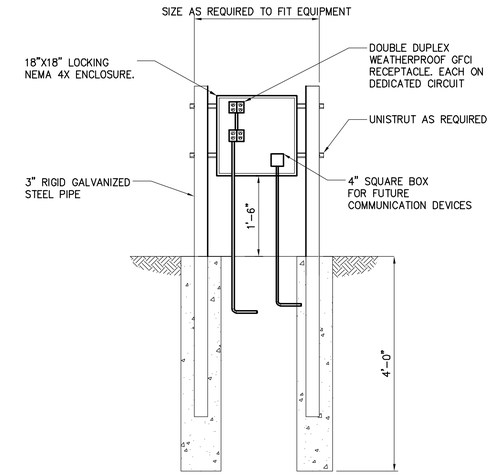

3 ELECTRICAL ENCLOSURE DETAIL
– NOT TO SCALE

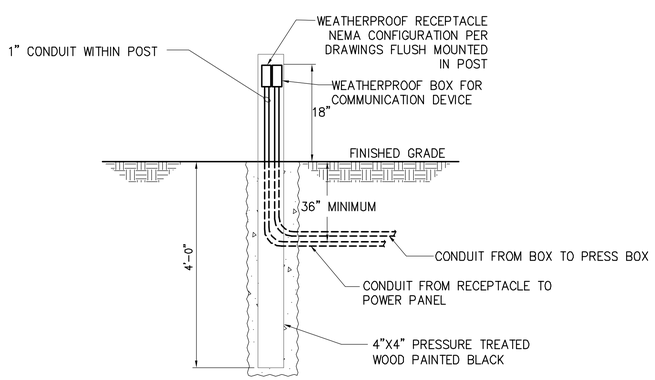

4 POWER PEDESTAL
– NOT TO SCALE

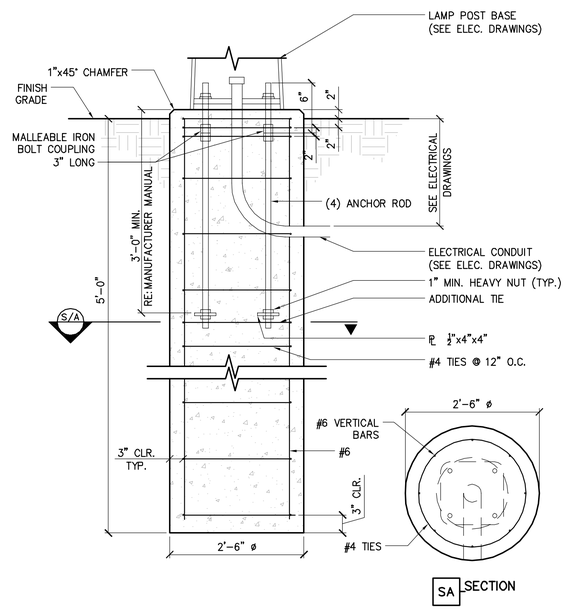

SA SECTION

6 LIGHT POLE BASE DETAIL
– NOT TO SCALE

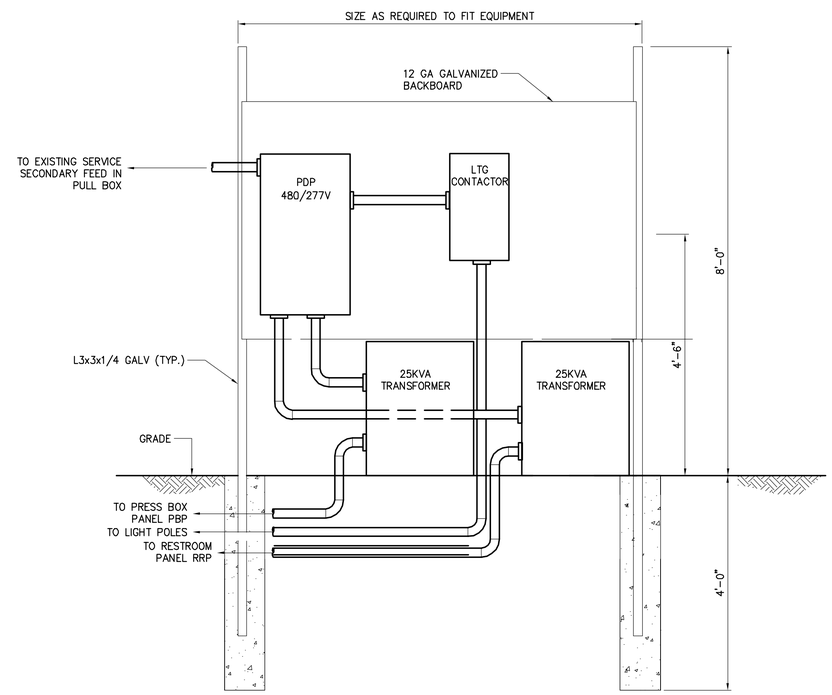

5 BACKBOARD DETAIL
– NOT TO SCALE

Drawing Copyright © 2015

CHA
6 Campus Drive
Parsippany, NJ 07054-4406
973.539.3125 · www.chacompanies.com

IT IS A VIOLATION OF LAW FOR ANY PERSON, UNLESS THEY ARE ACTING UNDER THE DIRECTION OF A LICENSED PROFESSIONAL ENGINEER, ARCHITECT, LANDSCAPE ARCHITECT OR LAND SURVEYOR TO ALTER AN ITEM IN ANY WAY. IF AN ITEM BEARING THE STAMP OF A LICENSED PROFESSIONAL ENGINEER, ARCHITECT, LANDSCAPE ARCHITECT OR LAND SURVEYOR SHALL STAMP THE DOCUMENT AND INCLUDE THE NOTATION "ALTERED BY" FOLLOWED BY THEIR SIGNATURE, THE DATE OF SUCH ALTERATION, AND A SPECIFIC DESCRIPTION OF THE ALTERATION.

PIONEERS

WILLIAM PATERSON UNIVERSITY

SOCCER FIELD IMPROVEMENTS

300 POMPTON RD.
WAYNE, NJ 07470

No.	Submittal / Revision	App'd.	By	Date
1	CONSTRUCTION DOCUMENTS			01/11/16

ELECTRICAL DETAILS

Designed By:	Drawn By:	Checked By:
SR	LH	JD
Issue Date: 01/11/2016	Project No: 30059	Scale: AS SHOWN

Drawing No.:
E-700

File: V:\PROJECTS\ANYYK4\30059\CADD_ACAD\E-700-30059.DWG
Saved: 1/7/2016 3:45:57 PM Plotted: 1/13/2016 2:00:35 PM Current User: Merklein, Tim LastSavedBy: 3840

ROOM FINISH SCHEDULE

NO.	ROOM NAME	FLOOR			BASE			WALLS			CEILING				REMARKS
		MAT.	FINISH	COLOR	MAT.	FINISH	COLOR	MAT.	FINISH	COLOR	MAT.	FINISH	COLOR	HEIGHT	
101	WOMEN'S ROOM	CONC	SEALER	---	C.T.	---		CMU	C.T.		GWB	LATEX PAINT		8'-0"	NOTES 1
102	MEN'S ROOM	CONC	SEALER	---	C.T.	---		CMU	C.T.		GWB	LATEX PAINT		8'-0"	NOTES 1
103	MECHANICAL ROOM	CONC	SEALER	---	---	---		CMU	EPOXY PAINT		GWB	LATEX PAINT		8'-0"	NOTES 1

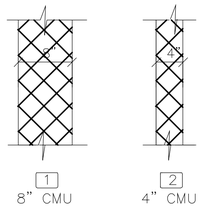

PARTITION TYPES

NOT TO SCALE

ROOM FINISH SCHEDULE NOTES:

1. FURR OUT CEILING WITH 1 1/ 2"FURRING STRIPS
2.
3.

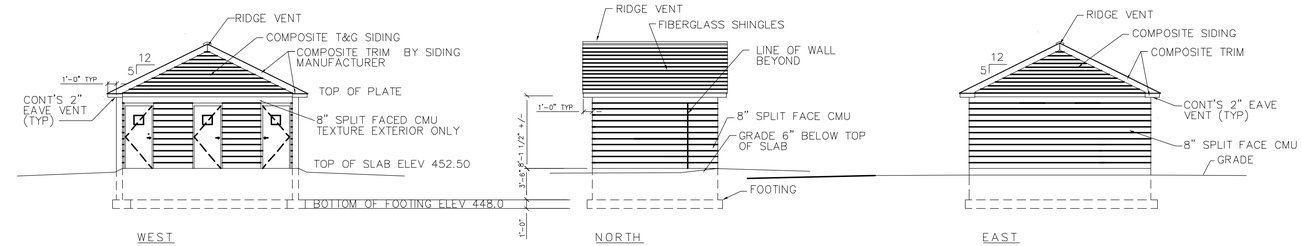

2 A101 EXTERIOR ELEVATIONS
SCALE: 1/8" = 1'-0"

SOUTH SIDE IDENTICAL BUT REVERSED

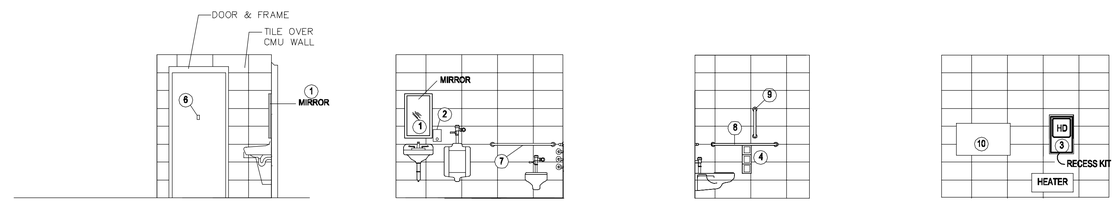

1 ROOM 103 NORTH ELEVATION
2 ROOM 103 EAST ELEVATION
3 ROOM 103 SOUTH ELEVATION
4 ROOM 103 WEST ELEVATION

3 A101 INTERIOR ELEVATIONS
SCALE: 1/ 4 " = 1'-0" ROOM 101 MIRRORED

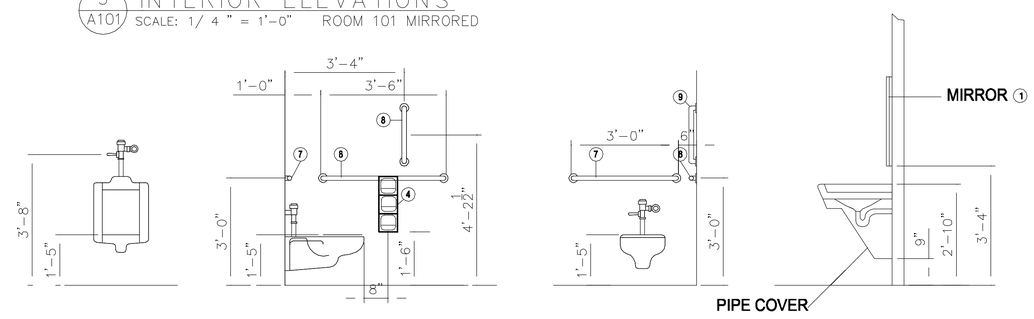

DOOR SCHEDULE

NO.	DOOR							FRAME						LABEL	REMARKS
	WIDTH	HGT	THK	TYPE	GAUGE	FINISH	COLOR	TYPE	DEPTH/ THROAT	GAUGE	FINISH	COLOR	HRDWR GROUP		
GRADE LEVEL															
101A	3/0	7/0	1-3/4"	1		EXT. PT.		FRP	7-5/8"		EXT. PT.		01	NONE	
102A	3/0	7/0	1-3/4"	1		EXT. PT.		FRP	7-5/8"		EXT. PT.		01	NONE	
103A	3/0	7/0	1-3/4"	1		EXT. PT.		FRP	7-5/8"		EXT. PT.		02	NONE	

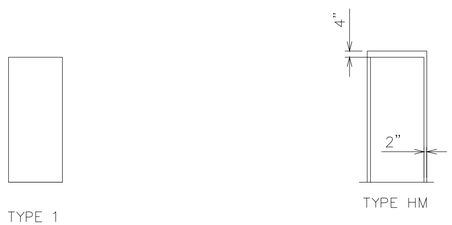

DOOR PROFILES:

NOT TO SCALE

FRAME TYPES:

NOT TO SCALE

DOOR SCHEDULE NOTES:

1. THROAT DEPTHS OF HOLLOW METAL (HM) FRAMES TO CORRESPOND WITH TYPE OF STUD USED
2.
3.

TOILET ACCESSORIES SCHEDULE

NUMBER	MANUFACTURER	MODEL	DESCRIPTION	PROVIDED BY	INSTALLED BY
1	BOBRICK	B-166/1836	MIRROR WITH STAINLESS STEEL ANGLE FRAME AND SHELF (18"x36")	GC	GC
2	BOBRICK	B-2111	SOAP DISPENSER	OWNER	GC
3	EXCEL DRYER	XL-SB	XLERATOR ELECTRIC HAND DRYER AND RECESS KIT	GC	GC
4	RoyceRolls	T3-3	SURFACE-MOUNTED TOILET TISSUE DISPENSER WITH PADLOCK (TRIPLE ROLL)	OWNER	GC
5	BOBRICK	B-270	SURFACE MOUNTED SANITARY NAPKIN DISPOSAL	OWNER	GC
6	BOBRICK	B-671	ROBE HOOK, MOUNT TO BACK OF DOOR AT 40" AFF	GC	GC
7	BOBRICK	B-5806.99x36	1 1/4" DIA. STAINLESS STEEL GRAB BAR PEENED FINISH/HC TOILET BACK	GC	GC
8	BOBRICK	B-5806.99x42	1 1/4" DIA. STAINLESS STEEL GRAB BAR PEENED FINISH/HC TOILET SIDE	GC	GC
9	BOBRICK	B-5806.99x18	1 1/4" DIA. STAINLESS STEEL GRAB BAR PEENED FINISH/HC TOILET SIDE		GC
10			BABY CHANGE TABLE	OWNER	GC

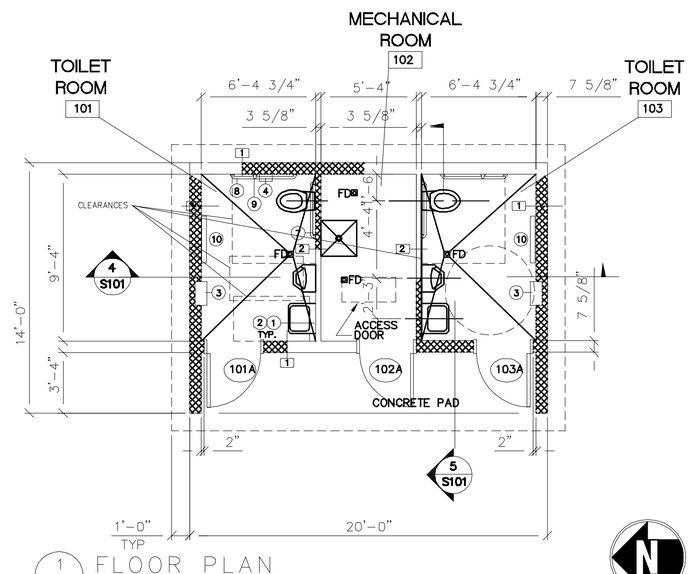

1 A101 FLOOR PLAN
SCALE: 1/4" = 1'-0"

BUILDING INFORMATION

OCCUPANCY GROUP	U UTILTY
CONSTRUCTION TYPE	III - B
BUILDING HEIGHT	
ALLOWABLE	1 STORY
ACTUAL	1 STORY
BUILDING AREA	
ALLOWABLE	5,500 S.F.
ACTUAL	252 S.F.

GENERAL NOTES

1. SEE SECTIONS ON S101 REINFORCING
2. PROVIDE SMOKE SEALS AT NON-FIRE RATED ASSEMBLIES
3. PROVIDE J-BEAD AT INTERSECTIONS OF DISSIMILAR MATERIALS
4. BULLNOSE ALL OUTSIDE CORNERS OF CMU, TYPICAL.
5. SLOPE ALL FLOORS TO DRAINS, MAX SLOPE 2%.

CODE LEGEND

1. 2015 NEW JERSEY BUILDING CODE
2. ANSI 117.1
3. NJAC
4. NSPC
5. FIXTURE COUNT - ADDITIONAL FACILITIES ARE PROVIDED AT THE REC CENTER AS SHOWN ON THE CIVIL DRAWINGS. THOSE SHOWN ARE FOR CONVENIENCE AND ARE IN ADDITION TO THE FIXTURE COUNT..
6. AT THE OWNERS REQUEST URINALS WERE ADDED TO UNISEX TOILET ROOMS TO SPARE WATER CLOSETS..

Drawing Copyright © 2015

CHA
6 Campus Drive
Parsippany, NJ 07054-4406
973.538.3130 - www.chacompanies.com

TIMOTHY WHITNEY
AIA N.J. LIC. 21 A101799500

IT IS A VIOLATION OF LAW FOR ANY PERSON, UNLESS THEY ARE ACTING UNDER THE DIRECTION OF A LICENSED PROFESSIONAL ENGINEER, ARCHITECT, LANDSCAPE ARCHITECT OR LAND SURVEYOR TO ALTER AN ITEM IN ANY WAY. IF AN ITEM BEARING THE STAMP OF A LICENSED PROFESSIONAL IS ALTERED, THE ALTERING ENGINEER, ARCHITECT, LANDSCAPE ARCHITECT OR LAND SURVEYOR SHALL STAMP THE DOCUMENT AND INCLUDE THE NOTATION "ALTERED BY" FOLLOWED BY THEIR SIGNATURE, THE DATE OF SUCH ALTERATION, AND A SPECIFIC DESCRIPTION OF THE ALTERATION.

WILLIAM PATERSON UNIVERSITY

SOCCER FIELD IMPROVEMENTS

300 POMPTON RD.
WAYNE, NJ 07470

No.	Submittal / Revision	App'd.	By	Date
1	CONSTRUCTION DOCUMENTS	DD	PE	01/11/16

FLOOR PLAN
ELEVATIONS
SCHEDULES
& NOTES

Designed By:	Drawn By:	Checked By:
Issue Date: 10/13/2015	Project No: 30059	Scale: AS SHOWN

Drawing No.:
A-101

File: V:\PROJECTS\ANY\K4\30059\CADD_ACAD\A101-30059.DWG
Saved: 1/13/2016 1:35:57 PM Plotted: 1/13/2016 2:01:33 PM Current User: Merkelin, Tim LastSavedBy: 4057

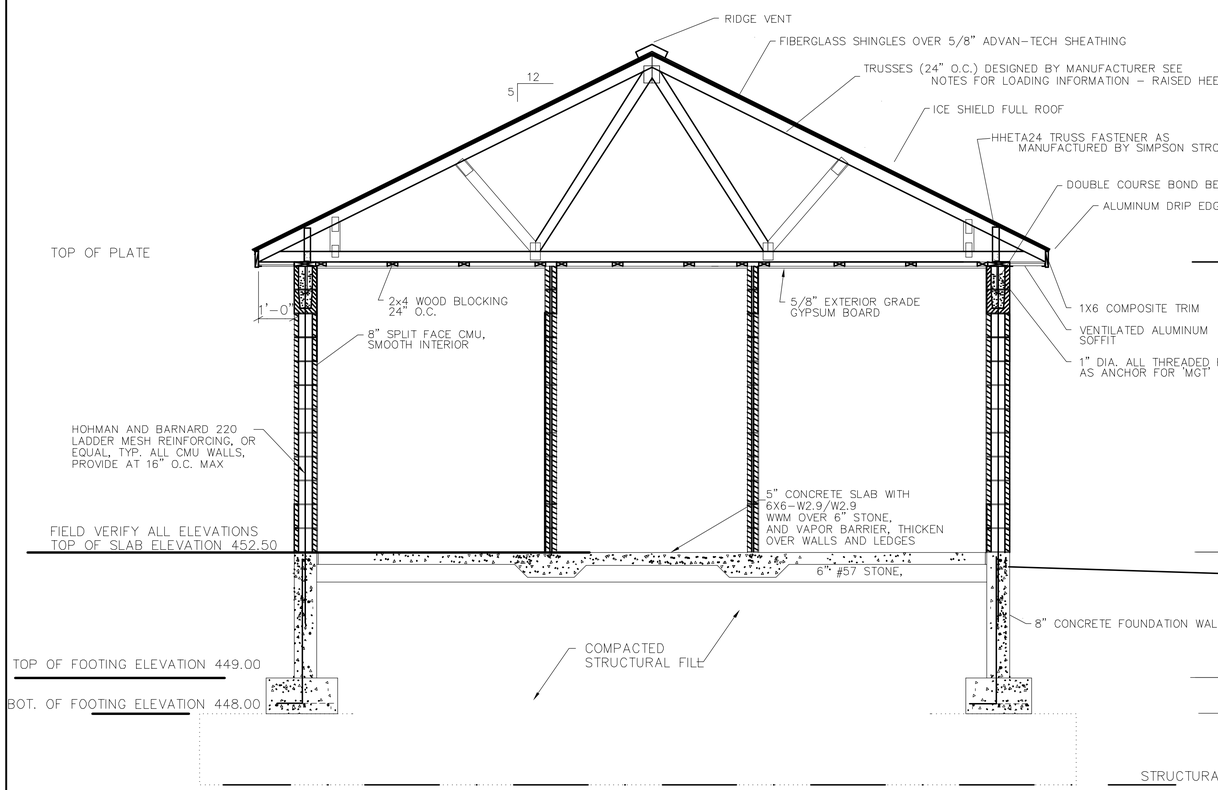

4 S101 CROSS SECTION
SCALE: 1/2" = 1'-0"

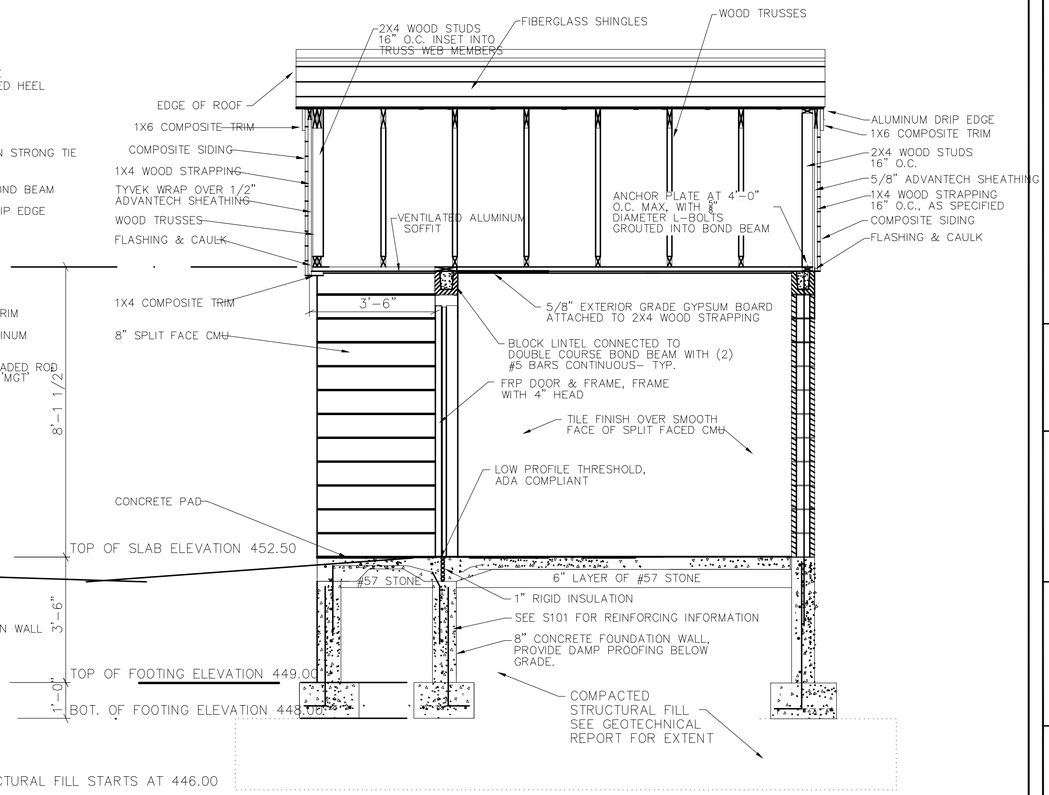

5 S101 CROSS SECTION AT DOOR
SCALE: 1/2" = 1'-0"

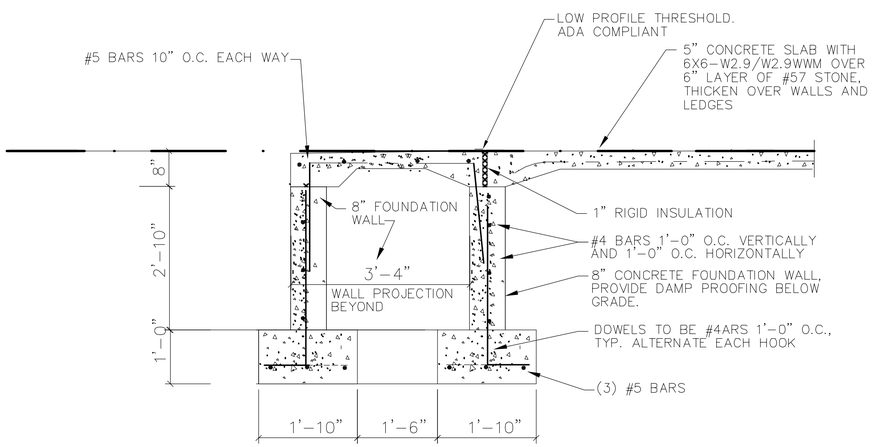

3 S101 SECTION AT DOORS
SCALE: 3/4" = 1'-0"

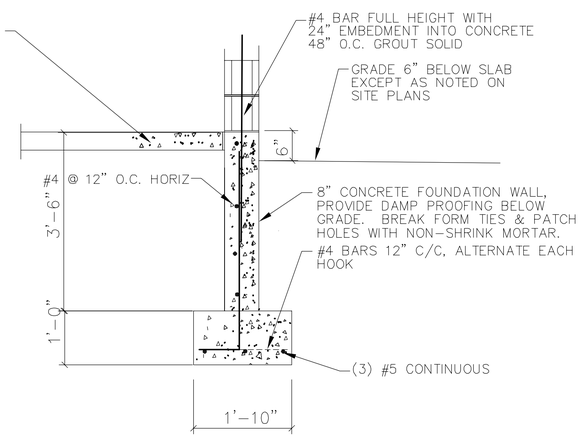

2 S101 SECTION AT WALL
SCALE: 3/4" = 1'-0"

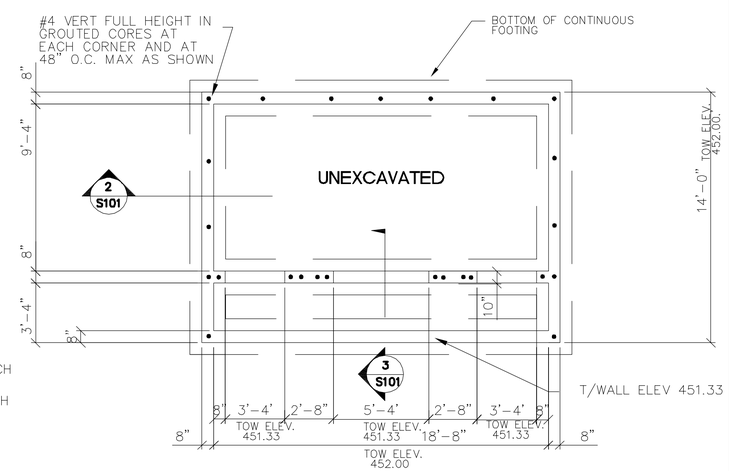

1 A102 FOUNDATION PLAN
SCALE: 1/4" = 1'-0"

GENERAL NOTES
1. TIE ALL REBARS WITH APPROVED CONCRETE WIRE TIES.
2.

ADD ALTERNATE NO.2

Drawing Copyright © 2015

CHA
6 Campus Drive
Parsippany, NJ 07054-4406
973.538.3130 - www.chacompanies.com

CHRISTOPHER JEDRICH
PROFESSIONAL ENGINEER N.J. LIC.
24GE04665100

IT IS A VIOLATION OF LAW FOR ANY PERSON, UNLESS THEY ARE ACTING UNDER THE DIRECTION OF A LICENSED PROFESSIONAL ENGINEER, ARCHITECT, LANDSCAPE ARCHITECT OR LAND SURVEYOR TO ALTER AN ITEM IN ANY WAY. IF AN ITEM BEARING THE STAMP OF A LICENSED PROFESSIONAL ENGINEER, LANDSCAPE ARCHITECT OR LAND SURVEYOR SHALL STAMP THE DOCUMENT AND INCLUDE THE NOTATION "ALTERED BY" FOLLOWED BY THEIR SIGNATURE, THE DATE OF SUCH ALTERATION, AND A SPECIFIC DESCRIPTION OF THE ALTERATION.

WILLIAM PATERSON UNIVERSITY

SOCCER FIELD IMPROVEMENTS

300 POMPTON RD.
WAYNE, NJ 07470

No.	Submittal / Revision	App'd.	By	Date
1	CONSTRUCTION DOCUMENTS		PE	1/11/16

FOUNDATION PLAN, DETAILS CROSS SECTION & NOTES

Designed By:	Drawn By:	Checked By:
Issue Date: 1/11/2016	Project No: 30059	Scale: AS SHOWN

Drawing No.:
S-101

File: V:\PROJECTS\ANY\K4\30059\CADD_ACAD\S101-30059.DWG
Saved: 1/7/2016 1:58:00 PM Plotted: 1/13/2016 2:02:18 PM Current User: Merklein, Tim LastSavedBy: 3583

GENERAL NOTES:

1. REFER TO THE PROJECT MANUAL FOR GOVERNING JOB REQUIREMENTS AND MATERIAL SPECIFICATIONS. THE FOLLOWING NOTES ARE SUPPLEMENTAL TO THE ABOVE REQUIREMENTS.

2. ALL DIMENSIONS TO, OF, AND IN EXISTING STRUCTURES SHALL BE VERIFIED IN FIELD BY CONTRACTOR AND ALL DISCREPANCIES SHALL BE REPORTED TO THE ENGINEER.

3. DO NOT CHANGE THE SIZE OR SPACING OF STRUCTURAL ELEMENTS WITHOUT THE APPROVAL OF THE ENGINEER.

4. DETAILS SHOWN ARE TYPICAL AND APPLY TO SIMILAR CONDITIONS UNLESS NOTED OTHERWISE.

5. THESE DRAWINGS DO NOT INCLUDE NECESSARY COMPONENTS FOR CONSTRUCTION SAFETY.

6. THE DESIGN IS BASED ON THE INTERNATIONAL BUILDING CODE (IBC), 2015 NEW JERSEY EDITION.

7. CONTRACTOR SHALL DETERMINE EXACT LOCATION OF ALL EXISTING UTILITIES BEFORE COMMENCING WORK. HE/SHE AGREES TO BE FULLY RESPONSIBLE FOR ANY AND ALL DAMAGES WHICH MIGHT BE OCCASIONED BY HIS/HER FAILURE TO LOCATE AND PRESERVE ALL UNDERGROUND UTILITIES.

8. INCORRECTLY FABRICATED, DAMAGED, OR OTHERWISE MISFITTING OR NONCONFORMING MATERIALS OR CONDITIONS SHALL BE REPORTED TO THE OWNER'S REPRESENTATIVE PRIOR TO REMEDIAL OR CORRECTIVE ACTION. ANY SUCH ACTION SHALL REQUIRE PRE-APPROVAL BY THE ENGINEER.

9. EACH CONTRACTOR SHALL COOPERATE WITH THE OWNER'S REPRESENTATIVE AND COORDINATE HIS/HER WORK WITH THE WORK OF OTHERS.

10. VERIFY SIZE AND LOCATION OF OPENINGS PRIOR TO BEGINNING WORK. FOR DIMENSIONS NOT SHOWN, SEE CIVIL AND ARCHITECTURAL DRAWINGS.

11. VERIFY SIZE AND LOCATION OF EQUIPMENT PADS WITH MECHANICAL AND/OR ELECTRICAL CONTRACTOR AND EQUIPMENT MANUFACTURER.

FOUNDATION AND SOIL PREPARATION NOTES:

1. THE FOUNDATION DESIGN IS BASED ON AN ALLOWABLE SOIL BEARING PRESSURE OF 3,000 POUNDS PER SQUARE FOOT AS RECOMMENDED IN THE GEOTECHNICAL REPORT NO. 30059 BY CHA DATED JUNE 17 & 18 2015.

2. THE CONTRACTOR SHALL REVIEW THE REPORT AND BORING LOGS DURING THE BIDDING PHASE OF THE PROJECT.

3. BOTTOM OF ALL FOOTINGS SHALL BE A MINIMUM OF 3' – 0" BELOW FINAL FINISHED GRADE. ADJUST FOOTING ELEVATIONS AS REQUIRED TO MAINTAIN MINIMUM FROST COVER.

4. PROVIDE POSITIVE DRAINAGE FOR ALL TRENCHES DURING CONSTRUCTION. DO NOT ALLOW ANY PONDING OF WATER DURING CONSTRUCTION.

5. DO NOT PLACE FOOTINGS IN WATER OR ON FROZEN GROUND. DO NOT ALLOW GROUND BENEATH FOOTINGS TO FREEZE.

6. BEAR ALL FOOTINGS ON COMPACTED STRUCTURAL FILL OR NATIVE UNDISTURBED SOIL AS APPROVED BY THE GEOTECHNICAL ENGINEER. SOIL BEARING SURFACES, PREVIOUSLY ACCEPTED BY OWNER'S REPRESENTATIVE, WHICH ARE ALLOWED TO BECOME SATURATED, FROZEN OR DISTURBED SHALL BE REWORKED TO SATISFACTION OF OWNER'S REPRESENTATIVE.

7. STRUCTURAL FILL AND SELECTED FILL: SOUND, DURABLE, SAND, GRAVEL, STONE, OR BLENDS OF THESE MATERIALS, FREE FROM ORGANIC, FROZEN OR OTHER DELETERIOUS MATERIALS, AND MEETING THE FOLLOWING GRADATION REQUIREMENTS:

SIEVE	PERCENT PASSING
4"	100
NO. 40	0 – 70
NO. 200	0 - 12

1. FINES PASSING NO. 200 SHALL BE NON-PLASTIC.
2. PARTICLE SIZE ANALYSIS SHALL SHOW NO GAP GRADING.

CAST-IN-PLACE CONCRETE NOTES:

1. ALL OTHER CONCRETE SHALL HAVE A 28 DAY DESIGN COMPRESSIVE STRENGTH OF 4500 PSI, MID OR HIGH RANGE WATER REDUCING AGENT, AND A 4-6" SLUMP. 20% OF CLASS F FLYASH MAY BE USED WITH THE APPROVAL OF THE ENGINEER AND THE CONCRETE FINISHER/CONTRACTOR BEFORE BIDDING. CONCRETE SHALL BE AIR ENTRAINED FOR SEVERE EXPOSURE F1 PER ACI TABLE 4.4.1. TOLERANCE ON AIR CONTENT AS DELIVERED SHALL BE +/- 1.5 PERCENT.

2. CONCRETE SHALL HAVE MAXIMUM WATER TO CEMENT RATIOS AS FOLLOWS:
1) 4,500 PSI CONCRETE – 0.45

3. PLACEMENT OF CONCRETE SHALL BE IN CONFORMANCE WITH ACI 117-06 "SPECIFICATION FOR TOLERANCE FOR CONCRETE AND MATERIALS AND COMMENTARY".

4. IF THE AIR TEMPERATURE IS GREATER THAN 90 DEGREES WITHIN 24 HOURS AFTER PLACEMENT, HOT WEATHER CONCRETE PROCEDURES SHALL BE USED. THE CONTRACTOR SHALL SUBMIT A PROCEDURE TO THE ENGINEER FOR APPROVAL. THESE PROCEDURES MAY INCLUDE THE FOLLOWING:
A. PLACING THE CONCRETE IN THE EARLY MORNING HOURS
B. THE USE OF EVAPORATION REDUCER (SEE BELOW)
C. THE USE OF MISTING AS A CURING METHOD
D. THE USE OF WET BLANKETS AS A CURING METHOD
E. THE USE OF A RETARDING ADMIXTURE (NOT PREFERABLE)

5. FOUR 4"X8" CONCRETE CYLINDERS SHALL BE MADE FOR EVERY 50 CUBIC YARDS OR EACH DAYS POUR, TO BE TESTED AT 7 DAYS AND 28 DAYS AND ONE TO HOLD. THE CONCRETE SLUMP, TEMPERATURE, AND AIR CONTENT SHALL BE MEASURED EVERY TIME A SET OF FOUR CYLINDERS IS MADE.

6. ALL CONCRETE WORK SHALL BE IN ACCORDANCE WITH THE LATEST EDITIONS OF THE AMERICAN CONCRETE INSTITUTE STANDARDS "BUILDING CODE REQUIREMENTS FOR STRUCTURAL CONCRETE" (ACI 318)

7. COVER FOR ALL REINFORCEMENT SHALL MEET THE COVERAGE REQUIREMENTS AS SHOWN IN THE LATEST ACI 318 OR AS SHOWN ON THE DETAILS. COVER DIMENSIONS SHOWN ON THE DETAILS CONTROL OVER ACI.

8. REINFORCING STEEL SHALL BE DOMESTIC DEFORMED BILLET STEEL CONFORMING TO ASTM A-615 GRADE 60. #4 REINFORCEMENT BARS AND SMALLER SHALL BE COLD BENT WHENEVER BENDING IS REQUIRED IN THE FIELD. REINFORCEMENT GREATER THAN A #4 BAR MAY NOT BE BENT IN THE FIELD WITHOUT APPROVAL OF THE ENGINEER.

9. PROVIDE CORNER BARS IN STRIP FOOTINGS, THE SAME SIZE AND NUMBER AS CONTINUOUS REINFORCEMENT UNLESS NOTED OTHERWISE.

10. WHERE REQUIRED, STEP NEW FOOTINGS UP OR DOWN IN RATIO OF TWO HORIZONTALS TO ONE VERTICAL TO JOIN EXISTING FOOTINGS. CAST STEPPED FOOTINGS MONOLITHICALLY.

11. DOWEL CONCRETE WALLS AND PIERS INTO FOOTINGS WITH DOWELS THE SAME SIZE AND SPACING AS VERTICAL REINFORCEMENT. EXTEND DOWELS TO WITHIN 3" OF BOTTOM OF FOOTING, TERMINATED WITH ACI STD. 90 DEGREE HOOK, UNLESS NOTED OTHERWISE.

12. PROVIDE 3/4" x 3/4" CHAMFER AT ALL EXPOSED CORNERS UNLESS NOTED OTHERWISE.

13. CAST CONCRETE ON SLOPED SURFACES BEGINNING AT LOWEST ELEVATION AND CONTINUING MONOLITHICALLY TOWARD HIGHER ELEVATIONS UNTIL INTENDED POUR IS COMPLETED.

14. REINFORCING BARS, BAR SUPPORTS, AND SPACERS SHALL BE DETAILED AND PROVIDED IN ACCORDANCE WITH THE LATEST ACI DETAILING MANUAL. USE WIRE-BAR SUPPORTS COMPLYING WITH CRSI SPECIFICATIONS. SUPPORTS SHALL NOT BE PLACED FURTHER THAN 4 FEET APART. DAYTON SUPERIOR PRODUCTS (800-745-3700) OR EQUAL UNLESS NOTED OTHERWISE IN THE SPECIFICATIONS:
A. AT SLABS-ON-GRADE: (SLAB THICKNESS MINUS 1 1/2 INCHES) HIGH. USE SUPPORTS WITH SAND PLATES OR HORIZONTAL RUNNERS WHERE BASE MATERIAL WILL NOT SUPPORT CHAIR LEGS.
B. AT FOOTINGS: 3 IN. HIGH. USE SUPPORTS WITH SAND PLATES OR HORIZONTAL RUNNERS WHERE BASE MATERIAL WILL NOT SUPPORT CHAIR LEGS. CONCRETE BLOCK OR CLAY MASONRY MAY NOT BE USED.
C. FOR EXPOSED TO VIEW CONCRETE SURFACES WHERE LEGS OF SUPPORTS ARE IN CONTACT WITH THE FORMS, PROVIDE SUPPORTS WITH LEGS THAT ARE PLASTIC PROTECTED (CRSI, CLASS 1) OR STAINLESS STEEL PROTECTED (CRSI, CLASS 2).

15. SEE ARCHITECTURAL AND MECHANICAL/ELECTRICAL DRAWINGS FOR EXACT LOCATIONS AND DETAILS OF DEPRESSED SLABS, PLATFORMS, CURBS, AND PADS.

16. NO PIPING OR CONDUITS SHALL BE INSTALLED IN ANY CONCRETE WITHOUT THE APPROVAL OF THE ENGINEER.

CONCRETE MASONRY UNIT (CMU) WALL NOTES:

1. REFER TO THE ARCHITECTURAL DRAWINGS OR SPECIFICATIONS FOR TYPES OF MASONRY OTHER THAN CONCRETE MASONRY, SUCH AS BRICK. THESE NOTES DO NOT APPLY TO 4" VENEER CMU. IF THERE ARE ANY CONFLICTS BETWEEN THE WRITTEN SPECIFICATIONS AND THESE NOTES, THESE NOTES SHALL GOVERN.

2. MORTAR SHALL CONFORM TO TABLE 1 OF ASTM C270, TYPE S. THE MORTAR MIX DESIGN (BY VOLUME) SHALL BE SUBMITTED TO THE ENGINEER BEFORE CONSTRUCTION BEGINS. HOLLOW CONCRETE MASONRY UNITS SHALL CONFORM TO ASTM C90 NORMALWEIGHT SPECIFICATIONS WITH A MINIMUM COMPRESSIVE STRENGTH OF 2800 PSI. THE SPECIFIED COMPRESSIVE STRENGTH, f'm, IS 2,000 PSI.

3. COARSE CONCRETE GROUT SHALL CONFORM TO TABLE 1 OF ASTM C476 WITH A MAXIMUM AGGREGATE SIZE OF 3/8" AND A SLUMP OF 8 TO 11 INCHES. GROUT MAY BE EITHER READY MIXED OR JOB MIXED. THE GROUT MIX DESIGN (BY VOLUME) SHALL BE SUBMITTED TO THE ENGINEER BEFORE CONSTRUCTION BEGINS.

4. WHEN MIXING MORTAR AND GROUT, CONTAINERS OF KNOWN VOLUME SHALL BE USED. MEASUREMENT USING SHOVELS SHALL NOT BE ALLOWED. FOR GROUT, THE SAND AND PEA GRAVEL SHALL BE TAKEN FROM SEPARATE PILES, NOT FROM A PRE-BLENDED PILE. IF MEASUREMENT BY SHOVELING OR USE OF A PRE-BLENDED PILE IS DISCOVERED, THE ENGINEER MAY REQUIRE ALL WALLS BUILT SO FAR TO BE TESTED PER ASTM C 1314 BY CUTTING 3 MASONRY PRISMS AND 3 GROUT CORES OUT OF THE WALL FOR EVERY 5,000 SQUARE FEET OF WALL, AND MAY REQUIRE ANY AREA OF WALL TESTING BELOW 1,500 PSI TO BE REPLACED AT NO COST TO THE OWNER.

5. AN INDEPENDENT LABORATORY SHALL VISIT THE SITE TO OBSERVE MASONRY CONSTRUCTION ON THE FIRST DAY OF MASONRY WORK AND FOR EVERY 5,000 SF OF WALL (OR LESS) THEREAFTER. DURING EACH VISIT, THE LABORATORY SHALL VERIFY:
A. PROPORTIONS OF MORTAR AND GROUT MIXING
B. REBAR AND JOINT REINFORCEMENT SIZES AND LOCATIONS
C. PROPER GROUT PLACEMENT AT REBAR
D. HEADJOINTS ARE FULLY MORTARED
E. CONTROL JOINTS ARE REINFORCED AND FULLY MORTARED
F. PROPER COLD AND HOT WEATHER PROCEDURES USED

6. COLD WEATHER AND HOT WEATHER PROCEDURES SHALL BE USED IN ACCORDANCE WITH ACI 530.1/ASCE 6/TMS 602 ARTICLE 1.8C AND 1.8D.

7. REINFORCING STEEL SHALL BE NEW DOMESTIC DEFORMED BILLET STEEL CONFORMING TO ASTM A-615 GRADE 60.

8. ALL LOAD BEARING CMU WALLS SHALL BE REINFORCED VERTICALLY WITH #5 BARS, AT 4 FEET ON CENTER, AND HORIZONTALLY WITH STANDARD TRUSS TYPE DUR-O-WALL, AT 16 INCHES ON CENTER. HORIZONTAL BOND BEAMS SHALL BE REINFORCED WITH 2 #5 BARS. PROVIDE REINFORCEMENT BARS ALL AROUND ALL OPENINGS, EXTENDING 2 FEET PAST EACH CORNER. ALL TOP COURSES SHALL HAVE A HORIZONTAL KNOCK-OUT BLOCK BOND BEAM. ALL REINFORCEMENT BARS IN CMU WALLS SHALL BE PROVIDED WITH 1" CONCRETE GROUT COVER.

9. THE MINIMUM SPLICE LENGTH FOR ALL VERTICAL AND HORIZONTAL REINFORCEMENT IN ALL MASONRY SHALL BE AS FOLLOWS:
#4 BARS – 2'-0" (MIN)
#5 BARS – 2'-7" (MIN)
#6 BARS – 4'-10" (MIN)
#7 BARS – 6'-7" (MIN)

10. PROVIDE VERTICAL CONTROL JOINTS AT LOCATIONS APPROVED BY THE ARCHITECT, WITH A MAXIMUM SPACING OF 20 FEET. HORIZONTAL BOND BEAM REINFORCEMENT SHALL CONTINUE THROUGH ALL CONTROL JOINTS IN ALL WALLS (BOTH LOAD-BEARING AND NON-LOAD BEARING WALLS). CONTROL JOINTS SHALL CONSIST OF A VERTICAL MASONRY JOINT, RAKED BACK AND CAULKED.

WOOD NOTES:

1. ALL WOOD TRUSSES SHALL BE #2 SOUTHERN PINE, OR #2 DOUGLAS FIR-SOUTH.

2. PRE-ENGINEERED WOOD TRUSSES SHALL BE OF TYPE IN WHICH CHORDS AND WEB MEMBERS ARE IN ONE PLANE. USE GUSSET PLATES, WHICH DEVELOP DESIGN STRENGTH REQUIRED AT JOINTS, FOR CONNECTIONS. COMPLY WITH THE "DESIGN SPECIFICATION FOR METAL PLATE CONNECTED WOOD TRUSSES" (T.P.I.), LATEST EDITION.

3. PRE-ENGINEERED WOOD ROOF TRUSSES SHALL BE DESIGNED FOR A TOP CHORD DEAD LOAD OF 10 PSF, A BOTTOM CHORD DEAD LOAD OF 10 PSF AND A TOP CHORD LIVE LOAD OF 20 PSF. MAXIMUM TRUSS DEFLECTION SHALL BE L/360 FOR TOTAL LIVE LOAD AND L/240 FOR TOTAL LOAD. NO SNOW LIVE LOAD REDUCTION WILL BE PERMITTED FOR SLOPE.

4. FURNISH GABLE END TRUSSES WITH VERTICAL 2"X4" STUDS AT 24" O.C. PLACE STUDS WITH STRONG AXIS PERPENDICULAR TO END WALL.

DESIGN LOADS:

THE FOLLOWING DESIGN LOADS WERE USED FOR THIS BUILDING:

ROOF LIVE LOAD: 20 PSF

ROOF SNOW LOAD
GROUND SNOW LOAD: 30 PSF
FLAT-ROOF SNOW LOAD: 26 PSF
SNOW EXPOSURE FACTOR: 1.0
SNOW LOAD IMPORTANCE FACTOR: 1.0
THERMAL FACTOR: 1.2

WIND DESIGN DATA:
BASIC WIND SPEED (3 SECOND GUST): 115 MPH
WIND IMPORTANCE FACTOR: 1.0
WIND EXPOSURE CATEGORY: B

SEISMIC DESIGN DATA:
SEISMIC IMPORTANCE FACTOR: 1.0
MAPPED SPECTRAL RESPONSE
ACCELERATIONS: SS = 0.359
S1 = 0.071
SITE CLASS: D
SEISMIC DESIGN CATEGORY: C
BASIC SEISMIC-FORCE-RESISTING SYSTEM: INTERMEDIATE REINFORCED MASONRY SHEAR WALLS
SEISMIC RESPONSE COEFFICIENT: Cs = 0.103
RESPONSE MODIFICATION FACTOR: R = 3.5
ANALYSIS PROCEDURE USED: EQUIVALENT LATERAL FORCE METHOD

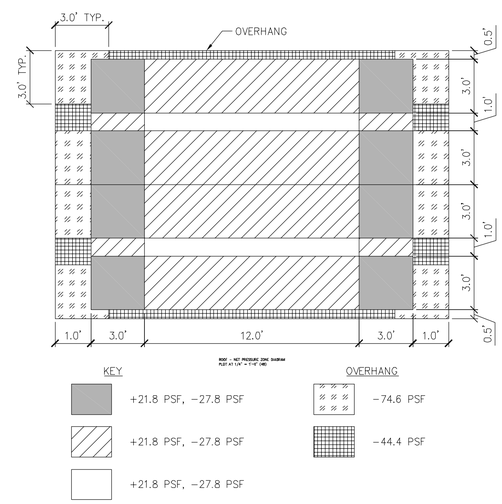

1 S201 ROOF – NET PRESSURE ZONE DIAGRAM
SCALE: 1/2" = 1'-0"

ADD ALTERNATE NO.2

Drawing Copyright © 2015

CHA
6 Campus Drive
Parsippany, NJ 07054-4406
973.338.3130 - www.chacompanies.com

CHRISTOPHER JEDRICH
PROFESSIONAL ENGINEER N.J. LIC.
24GE04665100

IT IS A VIOLATION OF LAW FOR ANY PERSON, UNLESS THEY ARE ACTING UNDER THE DIRECTION OF A LICENSED PROFESSIONAL ENGINEER, ARCHITECT, LANDSCAPE ARCHITECT OR LAND SURVEYOR TO ALTER AN ITEM IN ANY WAY. IF AN ITEM BEARING THE STAMP OF A LICENSED PROFESSIONAL IS ALTERED, THE ALTERING ENGINEER, ARCHITECT, LANDSCAPE ARCHITECT OR LAND SURVEYOR SHALL STAMP THE DOCUMENT AND INCLUDE THE NOTATION "ALTERED BY" FOLLOWED BY THEIR SIGNATURE, THE DATE OF SUCH ALTERATION, AND A SPECIFIC DESCRIPTION OF THE ALTERATION.

WILLIAM PATERSON UNIVERSITY

SOCCER FIELD IMPROVEMENTS

300 POMPTON RD.
WAYNE, NJ 07470

No.	Submittal / Revision	App'd.	By	Date
1	CONSTRUCTION DOCUMENTS		PE	1/11/16

STRUCTURAL NOTES

Designed By:	Drawn By:	Checked By:
Issue Date: 1/11/2016	Project No: 30059	Scale: AS SHOWN

Drawing No.:
S-102

File: X:\PROJECTS\ANY\K4\30059\CADD_ACAD\S102-30059.DWG
Saved: 1/7/2016 2:01:45 PM Plotted: 1/13/2016 2:03:11 PM Current User: Merklein, Tim LastSavedBy: 3583

ABBREVIATIONS

ACC	AIR COOLED CONDENSER
APD	AIR PRESSURE DROP
BHP	BRAKE HORSEPOWER
CAP	CAPACITY
CD	CONDENSATE DRAIN
CFM	CUBIC FEET PER MINUTE
CLG	CEILING
DN	DOWN
DX	DIRECT EXPANSION
EA	EXHAUST AIR
EAT	ENTERING AIR TEMPERATURE
EVAP	EVAPORATOR
FLA	FULL LOAD AMPS
FLR	FLOOR
FT	FOOT/FEET
HP	HORSEPOWER
HZ	HERTZ
IN	INCHES
KW	KILOWATTS
LAT	LEAVING AIR TEMPERATURE
MBH	BTU PER HOUR (THOUSAND)
MCA	MINIMUM CIRCUIT AMPS
MIN	MINIMUM
MIN SP	MINIMUM STATIC PRESSURE
MOCP	MAXIMUM OVERCURRENT PROTECTION
MTG. HGT.	MOUNTING HEIGHT
OA	OUTSIDE AIR
PH	PHASE
RPM	REVOLUTIONS PER MINUTE
SA	SUPPLY AIR
SP	STATIC PRESSURE
TSP	TOTAL STATIC PRESSURE
TYP	TYPICAL
VOLT	VOLTAGE
W	WATT
°F	DEGREES FAHRENHEIT
&	AND
#	NUMBER

DUCTWORK SYMBOLS

24x12	DUCT SIZE, (WxH)
	SUPPLY DUCT UP
	RETURN/EXHAUST DUCT UP
	SUPPLY DUCT DOWN
	RETURN/EXHAUST DUCT DOWN
R	INCLINED RISE IN DIRECTION OF AIRFLOW
D	INCLINED DROP IN DIRECTION OF AIRFLOW
10/6 10x6	SUPPLY DUCT SECTION, FIRST FIGURE IS TOP
10/6 10x6	RETURN/EXHAUST DUCT SECTION, FIRST FIGURE IS TOP
	FLEXIBLE DUCT CONNECTION
VD VD	VOLUME CONTROL DAMPER (VD)
	FLEXIBLE DUCT, MAXIMUM LENGTH 4'
	AIR FLOW

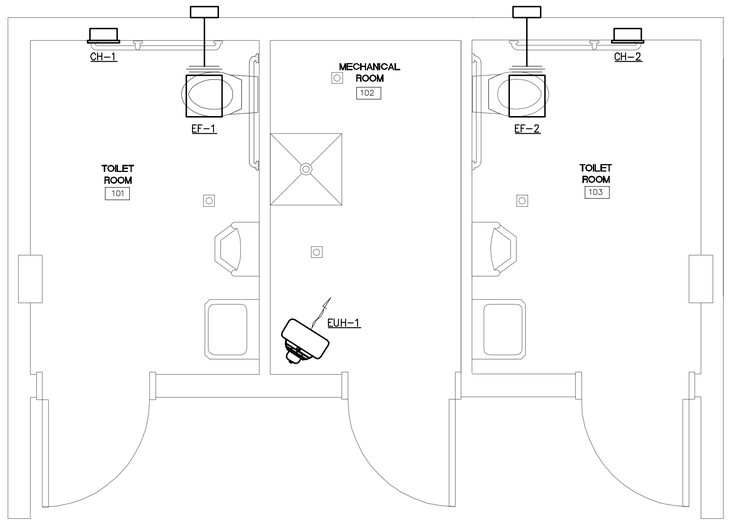

FIRST FLOOR MECHANICAL PLAN
SCALE: 1/2" = 1'-0"

ELECTRIC CABINET HEATER SCHEDULE

TAG	LOCATION	SERVICE	TYPE	BTUH	ELECTRICAL				MANUFACTURER & MODEL#	REMARKS
					KW	AMPS	VOLT	PH		
CH-1	TOILET ROOM 101	HEATING	RECESSED	6826	2.0	9.6	208	1	QMARK CWH120BDSF	SEE BELOW
CH-2	TOILET ROOM 103	HEATING	RECESSED	6826	2.0	9.6	208	1	QMARK CWH120BDSF	SEE BELOW

NOTE: PROVIDE INTEGRAL DISCONNECT SWITCH AND THERMOSTAT AND TAMPER RESISTANT COVER. COORDINATE CUSTOM COLOR WITH ARCHITECT.

FAN SCHEDULE

TAG	LOCATION	SERVICE	TYPE	CFM	TSP (IN WG)	FAN MOTOR DATA				MANUFACTURER & MODEL#	REMARKS
						RPM	W	VOLT	PH		
EF-1	TOILET ROOM 101	EXHAUST	IN-LINE CEILING	75	0.25	900	61	120	1	COOK GC-124	SEE BELOW
EF-2	TOILET ROOM 103	EXHAUST	IN-LINE CEILING	75	0.25	900	61	120	1	COOK GC-124	SEE BELOW

NOTE: PROVIDE FACTORY SUPPLIED DISCONNECT, WHITE ALUMINUM GRILLE, AND MANUFACTURER'S STANDARD WALL CAP WITH BIRDSCREEN AND POWDER COATED FINISH. COORDINATE CUSTOM WALL CAP COLOR WITH ARCHITECT. PROVIDE TIME DELAY SWITCH TO KEEP EXHAUST FAN OPERATIONAL FOR 30 MINUTES AFTER THE LIGHT SWITCH HAS BEEN TURNED OFF.

ELECTRIC UNIT HEATER SCHEDULE

TAG	LOCATION	SERVICE	TYPE	BTUH	CFM	THROW (FT)	ELECTRICAL			MANUFACTURER & MODEL#	REMARKS
							KW	VOLT	PH		
EUH-1	MECHANICAL ROOM 102	HEATING	FORCED AIR	6396	270	16	1.9	208	1	QMARK MODEL # MWUH5004	SEE BELOW

NOTE: PROVIDE FACTORY SUPPLIED DISCONNECT SWITCH AND INTEGRAL THERMOSTAT.

Drawing Copyright © 2015

CHA
6 Campus Drive
Parsippany, NJ 07054-4406
973.538.3125 - www.chacompanies.com

IT IS A VIOLATION OF LAW FOR ANY PERSON, UNLESS THEY ARE ACTING UNDER THE DIRECTION OF A LICENSED PROFESSIONAL ENGINEER, ARCHITECT, LANDSCAPE ARCHITECT OR LAND SURVEYOR TO ALTER AN ITEM IN ANY WAY. IF AN ITEM BEARING THE STAMP OF A LICENSED PROFESSIONAL IS ALTERED, THE ALTERING ENGINEER, ARCHITECT, LANDSCAPE ARCHITECT OR LAND SURVEYOR SHALL STAMP THE DOCUMENT AND INCLUDE THE NOTATION "ALTERED BY" FOLLOWED BY THEIR SIGNATURE, THE DATE OF SUCH ALTERATION, AND A SPECIFIC DESCRIPTION OF THE ALTERATION.

PIONEERS

WILLIAM PATERSON UNIVERSITY

SOCCER FIELD IMPROVEMENTS

300 POMPTON RD.
WAYNE, NJ 07470

No.	Submittal / Revision	App'd.	By	Date
1	CONSTRUCTION DOCUMENTS			01/11/16

RESTROOM BUILDING MECHANICAL PLAN

Designed By:	Drawn By:	Checked By:
WM	TM	XXX
Issue Date: 01/11/2016	Project No: 30059	Scale: AS SHOWN

Drawing No.:
M-1

File: V:\PROJECTS\ANY\X4\30059\CADD_ACAD\M-1-30059.DWG
Saved: 1/8/2016 5:47:48 AM Plotted: 1/13/2016 2:04:24 PM Current User: Merkelin, Tim LastSavedBy: 3864

ABBREVIATIONS

AC	ALTERNATING CURRENT
AFF	ABOVE FINISH FLOOR
BOP	BOTTOM OF PIPE
CLG	CEILING
DN	DOWN
EWT	ENTERING WATER TEMPERATURE
FAI	FRESH AIR INTAKE
FF	FINISH FLOOR
FLA	FULL LOAD AMPS
FLR	FLOOR
FT HD	FEET OF HEAD
GA	GAUGE or GAGE
GAL	GALLON
GPH	GALLONS PER HOUR
GPM	GALLONS PER MINUTE
HP	HORSEPOWER
IN	INCH
IN WG	INCHES WATER GAUGE
INV	INVERT
LAV	LAVATORY
LF	LINEAR FEET/FOOT
LWT	LEAVING WATER TEMPERATURE
MAX	MAXIMUM
MCA	MINIMUM CIRCUIT AMPS
MIN	MINIMUM
MOCP	MAXIMUM OVERCURRENT PROTECTION
N/A	NOT APPLICABLE
PD	PRESSURE DROP
PH	PHASE
PSIG	POUNDS PER SQUARE INCH GAUGE
RPM	REVOLUTIONS PER MINUTE
TEMP	TEMPERATURE
UNO	UNLESS NOTED OTHERWISE
UR	URINAL
VOLT	VOLTAGE
VTR	VENT THROUGH ROOF
W	WATT
WC	WATER CLOSET
°F	DEGREES FAHRENHEIT
&	AND
#	NUMBER

PIPING LINE TYPES

2" CW	COLD WATER PIPING (SIZE AS INDICATED)
2" HW	HOT WATER PIPING (SIZE AS INDICATED)
2" SAN	SANITARY PIPING (SIZE AS INDICATED)
2" USAN	UNDERSLAB SANITARY PIPING (SIZE AS INDICATED)
2" UV	UNDERSLAB VENT PIPING (SIZE AS INDICATED)
2" V	VENT PIPING (SIZE AS INDICATED)

SYMBOLS

- BALANCING VALVE
- BALL VALVE
- GATE VALVE
- PRESSURE RELIEF VALVE
- PRESSURE REDUCING VALVE
- PRESSURE REGULATING VALVE
- SWING CHECK VALVE
- CIRCUIT SETTER BALANCING VALVE
- WYE STRAINER
- REDUCED PRESSURE ZONE (BALL VALVES)
- PIPE TURNING UP
- PIPE TURNING DOWN
- PIPE BRANCH UP
- PIPE BRANCH DOWN
- CONCENTRIC REDUCER
- PIPE CAP
- PIPE PLUG
- PIPE BREAK
- UNION
- MANUAL AIR VENT
- DECK PLATE CLEANOUT
- WALL CLEANOUT/CLEANOUT
- FLOOR DRAIN/ROOF DRAIN
- HOSE BIBB/NON-FREEZE HOSE BIBB
- WATER HAMMER ARRESTER
- THERMOMETER
- PRESSURE GAUGE

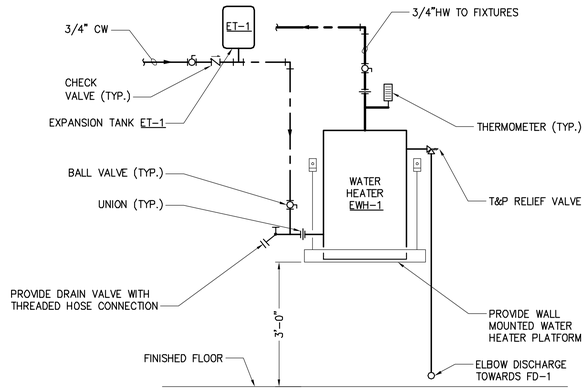

ELECTRIC WATER HEATER DETAIL

SCALE: NOT TO SCALE

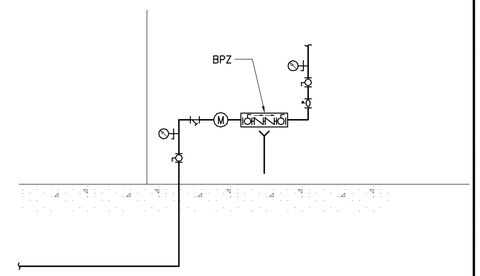

WATER SERVICE ENTRANCE DETAIL

SCALE: NOT TO SCALE

EXPANSION TANK SCHEDULE

TAG	LOCATION	SERVICE	TYPE	TANK VOLUME (GAL)	ACCEPTANCE VOLUME (GAL)	FILL PRESS (PSIG)	RELIEF VALVE SETTING (PSIG)	MANUFACTURER & MODEL#	REMARKS
ET-1	MECHANICAL ROOM 102	EWH-1	IN-LINE	2.0	0.9	55	150	AMTROL ST-5C	ASME TANK CONSTRUCTION

ELECTRIC WATER HEATER SCHEDULE

TAG	LOCATION	SERVICE	TANK CAPACITY (GAL)	RECOVERY RATE AT TEMP RISE (GPH)	TEMP RISE (°F)	TEMP SETPOINT (°F)	ELECTRICAL DATA				MANUFACTURER & MODEL#	REMARKS
							KW	VOLT	PH	FLA		
EWH-1	MECHANICAL ROOM 102	DOMESTIC HOT WATER	10	20	100	140	5	208	1	24	AO SMITH DEL-10S-5	SEE BELOW

NOTE: PROVIDE PRESSURE RELIEF VALVE.

PLUMBING FIXTURE SCHEDULE

TAG	ITEM	MANUFACTURER & MODEL	WASTE	VENT	CW	HW	FITTINGS/ACCESSORIES OR DESIGN DATA	ITEM DESCRIPTION
HWC	WALL-HUNG HANDICAP WATER CLOSET	AMERICAN STANDARD AFWALL AQUAMETER # 2257.103	3"	2"	1"	NA	SLOAN ROYAL LC-111-1.6 FLUSHVALVE OLSONITE # 95C SEAT	VITREOUS CHINA, WATER SAVER, SIPHON JET ACTION, ELONGATED BOWL, MEETS ANSI A112.19.2M. MOUNT TO ADA GUIDELINES
HUR	WALL-HUNG HANDICAP URINAL	AMERICAN STANDARD #6501.010	2"	1-1/2"	1"	NA	SLOAN ROYAL 186-1.0 FLUSH VALVE	VITREOUS CHINA, WATER SAVER, WASHOUT ACTION, MEETS ANSI A112.19.2 MOUNT TO ADA GUIDELINES
HLAV	WALL-HUNG HANDICAP LAVATORY	AMERICAN STANDARD LUCERNE #0355.012	1-1/4"	1-1/4"	1/2"	1/2"	AMERICAN STANDARD 5500.175 FAUCET WITH DRAIN LESS POP UP.	VITREOUS CHINA, REAR OVERFLOW WITH STRAINER PROVIDE OFFSET TRAP AND MOUNT TO ADA GUIDELINES
MS	MOP SINK	FIAT #SB 2424	3"	1-1/4"	1/2"	1/2"	FIAT #830-AA FAUCET, #889-CC MOP HANGER, #1239-BB ALUMINUM BUMPER GUARD	MOLDED-STONE, 6" HIGH 2" WIDE WALLS, STAINLESS STEEL DRAIN BODY, COMBINATION STAINLESS STEEL DOME STRAINER WITH LINT BASKET. PROVIDE DEEP SEAL P-TRAP
FD	FLOOR DRAIN	JOSAM 30000 SERIES	SEE PLAN	NA	NA	NA	NA	TWO-PIECE BODY WITH ADJUSTABLE STRAINER, WITH WEEPHOLES AND INVERTIBLE COLLAR
DPCO	DECK PLATE CLEANOUT	JAY R. SMITH 4020 SERIES	SEE PLAN	NA	NA	NA	NA	ADJUSTABLE FLOOR CLEANOUT WITH POLISHED BRONZE COVER
WCO	WALL CLEANOUT	JOSAM 58890 SERIES	SEE PLAN	NA	NA	NA	NA	CAST BRONZE COUNTERSUNK PLUG AND POLISHED STAINLESS STEEL ROUND ACCESS COVER PLATE SECURED TO PLUG BY COUNTERSUNK SCREW
HB	HOSE BIBB	WATTS No. SC8	NA	NA	3/4"	NA	NA	COMBINATION HOSE BIBB WITH SEPARATE TAMPER PROOF VACUUM BREAKER WITH CAST IRON HAND WHEEL AND ADJUSTABLE PACKING NUT
RPZ	REDUCED PRESSURE ZONE ASSEMBLY	WATTS SERIES 009	2"	NA	1-1/2"	NA	NA	BRONZE BODY, REDUCED PRESSURE ZONE ASSEMBLY WITH TWO INDEPENDENT SPRING CHECK MODULES, DIFFERENTIAL PRESSURE RELIEF VALVE, QUARTER TURN BRONZE BALL VALVES, AND AIR GAP FITTING.
TMV	POINT OF USE THERMOSTATIC MIXING VALVE	WATTS SERIES LFUSG-B	NA	NA	SEE PLAN	SEE PLAN	NA	LEAD FREE BRASS BODY CONSTRUCTION, TAMPER RESISTANT LOCKING NUT, INSTALL BETWEEN SUPPLY STOPS AND FAUCET, CONFORM TO ASSE 1070.

Drawing Copyright © 2015

CHA
6 Campus Drive
Parsippany, NJ 07054-4406
973.539.3125 · www.chacompanies.com

IT IS A VIOLATION OF LAW FOR ANY PERSON, UNLESS THEY ARE ACTING UNDER THE DIRECTION OF A LICENSED PROFESSIONAL ENGINEER, ARCHITECT, LANDSCAPE ARCHITECT OR LAND SURVEYOR TO ALTER AN ITEM IN ANY WAY. IF AN ITEM BEARING THE STAMP OF A LICENSED PROFESSIONAL IS ALTERED, THE ALTERING ENGINEER, ARCHITECT, LANDSCAPE ARCHITECT OR LAND SURVEYOR SHALL STAMP THE DOCUMENT AND INCLUDE THE NOTATION "ALTERED BY" FOLLOWED BY THEIR SIGNATURE, THE DATE OF SUCH ALTERATION, AND A SPECIFIC DESCRIPTION OF THE ALTERATION.

PIONEERS

WILLIAM PATERSON UNIVERSITY

SOCCER FIELD IMPROVEMENTS

300 POMPTON RD.
WAYNE, NJ 07470

No.	Submittal / Revision	App'd.	By	Date
1	CONSTRUCTION DOCUMENTS			01/11/16

LEGEND, ABBREVIATIONS, AND SCHEDULES

Designed By:	Drawn By:	Checked By:
WM	TM	XXX
Issue Date: 01/11/2016	Project No: 30059	Scale: AS SHOWN

Drawing No.:

P-0

File: V:\PROJECTS\ANY\K4\30059\CADD_ACAD\P-0 LEGEND, ABBREVIATIONS, AND SCHEDULES.DWG
Saved: 1/12/2016 4:02:03 PM Plotted: 1/13/2016 2:05:39 PM Current User: Merkelin, Tim LastSavedBy: 5539

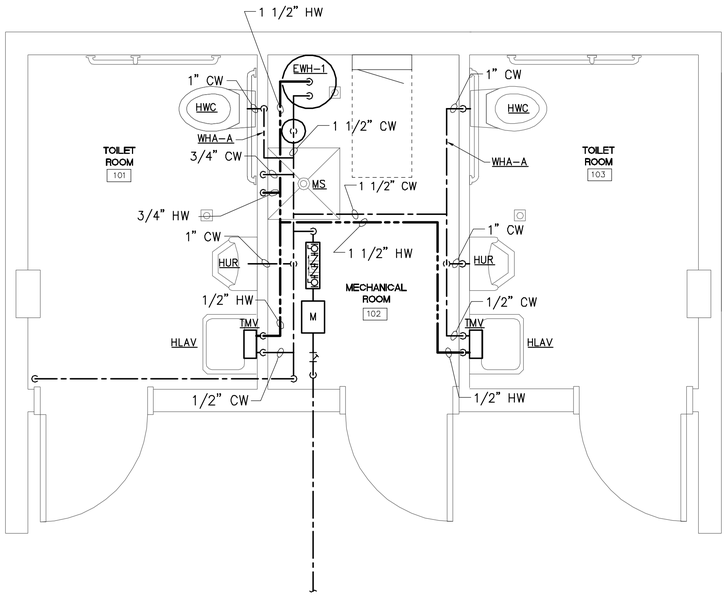

FIRST FLOOR POTABLE PIPING PLAN

SCALE: 1/2" = 1'

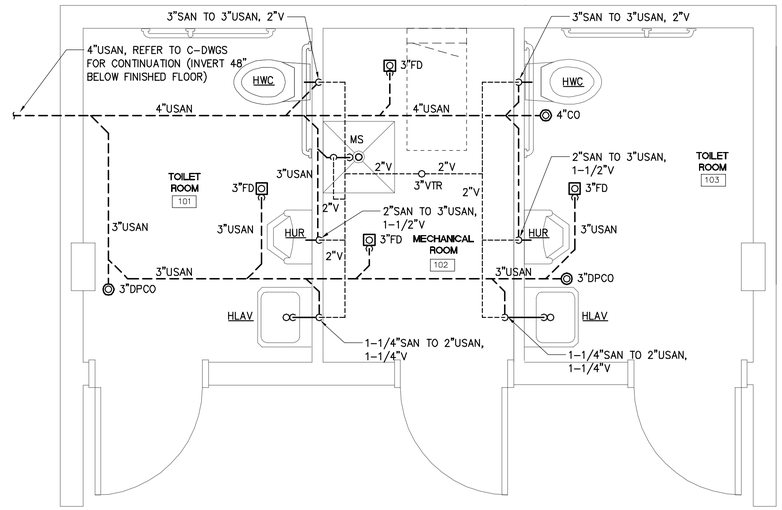

FIRST FLOOR DRAINAGE AND VENT PIPING PLAN

SCALE: 1/2" = 1'

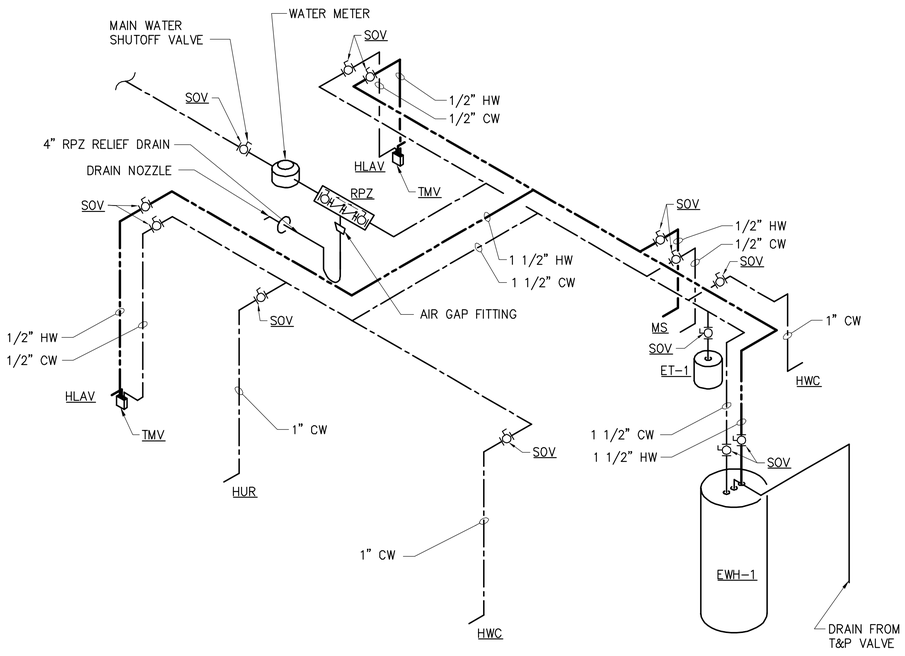

FIRST FLOOR POTABLE PIPING SCHEMATIC PLAN

SCALE: NOT TO SCALE

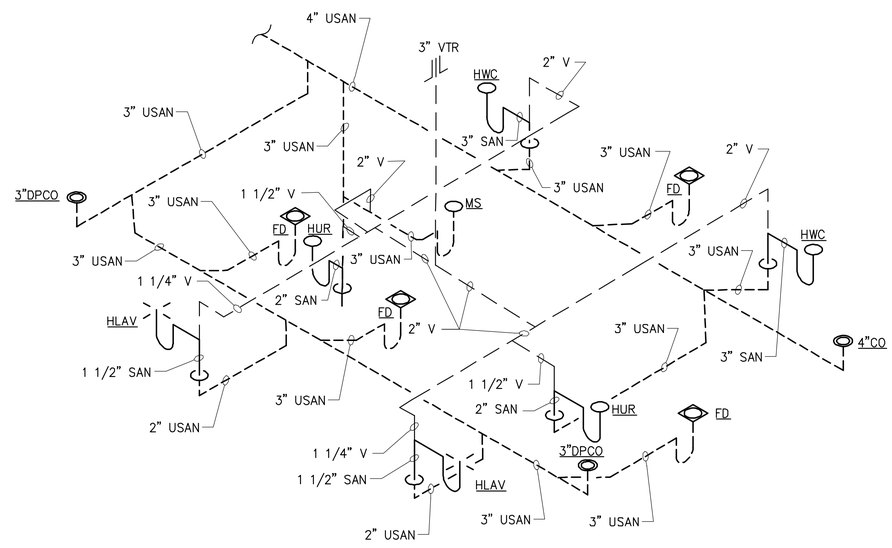

FIRST FLOOR DRAINAGE AND VENT PIPING SCHEMATIC PLAN

SCALE: NOT TO SCALE

File: V:\PROJECTS\ANY\W4\30059\CADD_ACAD\P-1-30059.DWG
Saved: 1/13/2016 12:30:32 PM Plotted: 1/13/2016 2:06:55 PM Current User: Merkelin, Tim LastSavedBy: 5539

Drawing Copyright © 2015

CHA
6 Campus Drive
Parsippany, NJ 07054-4406
973.538.3125 - www.chacompanies.com

IT IS A VIOLATION OF LAW FOR ANY PERSON, UNLESS THEY ARE ACTING UNDER THE DIRECTION OF A LICENSED PROFESSIONAL ENGINEER, ARCHITECT, LANDSCAPE ARCHITECT OR LAND SURVEYOR TO ALTER AN ITEM IN ANY WAY. IF AN ITEM BEARING THE STAMP OF A LICENSED PROFESSIONAL IS ALTERED, THE ALTERING ENGINEER, ARCHITECT, LANDSCAPE ARCHITECT OR LAND SURVEYOR SHALL STAMP THE DOCUMENT AND INCLUDE THE NOTATION "ALTERED BY" FOLLOWED BY THEIR SIGNATURE, THE DATE OF SUCH ALTERATION, AND A SPECIFIC DESCRIPTION OF THE ALTERATION.

PIONEERS

WILLIAM PATERSON UNIVERSITY

SOCCER FIELD IMPROVEMENTS

300 POMPTON RD.
WAYNE, NJ 07470

No.	Submittal / Revision	App'd.	By	Date
1	CONSTRUCTION DOCUMENTS			01/11/16

RESTROOM BUILDING PLUMBING PLAN

Designed By:	Drawn By:	Checked By:
WM	TM	XXX
Issue Date: 01/11/2016	Project No: 30059	Scale: AS SHOWN

Drawing No.:

P-1

GENERAL NOTES

1. REFER TO EQUIPMENT SCHEDULE ON DWG. E-500 FOR CIRCUITS INFORMATION.
2. REFER TO MECHANICAL DRAWINGS FOR EXACT EQUIPMENT LOCATION.
3. REFER TO LUMINAIRE SCHEDULE ON DWG. E-500 FOR LIGHT FIXTURES DATA.

CODED NOTES

(1) PROVIDE CONDUIT AND WIRING TO ELECTRICAL CABINET HEATERS. REFER TO THE EQUIPMENT SCHEDULE ON DRAWING E-500 FOR CIRCUITING DETAILS.

(2) PROVIDE CONDUIT AND WIRING TO INTERLOCK EXHAUST FANS WITH OCCUPANCY SENSOR WALL SWITCHES.

(3) FURNISH AND INSTALL ELECTRIC HAND DRYER AND MOUNT ON THE WALL AS PER MANUFACTURER RECOMMENDATIONS. PROVIDE CONDUIT AND WIRING AS PER EQUIPMENT SCHEDULE ON DRAWING E-500.

(4) FURNISH AND INSTALL LIGHTING CONTRACTOR WITH TORK, MODEL E101B, DIGITAL LIGHTING TIMER, PHOTOCELL, AND ALL ASSOCIATED EQUIPMENT. TIMER/PHOTOCELL CONTROL FOR EXTERIOR LIGHTING. MOUNT PHOTOCELL ON EXTERIOR WALL AND TIE INTO TIMER TO CONTROL LIGHTING OPERATION. INSTALL CONTACTOR AND TIMER/PHOTOCELL PER MANUFACTURER RECOMMENDATIONS.

(5) FURNISH AND INSTALL ELECTRICAL POWER CIRCUITS TO GRINDER PUMP AND PUMP CONTROLLER (PROVIDED BY OTHER). INSTALL PUMP CONTROLLER ON THE OUTSIDE WALL. ROUTE UNDERGROUND POWER AND CONTROL CIRCUITING FROM CONTROLLER TO PUMP AS PER MANUFACTURER'S INSTALLATION MANUAL. REFER TO CIVIL DRAWINGS FOR GRINDER PUMP EXACT LOCATION.

(6) FURNISH AND INSTALL DISCONNECT SWITCH, CONDUIT, CONDUCTORS, AND ALL NECESSARY ACCESSORIES FOR ELECTRIC WATER HEATER, EWH-1. ELECTRIC WATER HEATER SUPPLIED BY PLUMBING CONTRACTOR. REFER TO EQUIPMENT SCHEDULE ON DRAWING E-500 FOR CIRCUITING DETAILS.

(7) PROVIDE ALL CONDUIT, CONDUCTOR, AND ALL NECESSARY ACCESSORIES FOR COMPLETE CIRCUIT TO EXTERIOR LIGHTS.

(8) FURNISH AND INSTALL SURFACE MOUNTED 208/120V, 1PH, 3W, 100A, 30 CIRCUITS PANEL WITH LOCKABLE COVERS. PROVIDE 3/4" PLYWOOD BEHIND PANEL FOR SUPPORT. REFER TO PANEL SCHEDULE LVP-1 FOR CONTINUATION.

(9) INSTALL DISCONNECT SWITCH FURNISHED WITH HEATER AND PROVIDE POWER TO ELECTRIC UNIT HEATER EUH-1 SUPPLIED BY MECHANICAL CONTRACTOR. REFER TO EQUIPMENT SCHEDULE ON DRAWING E-500 FOR CIRCUITING DETAILS.

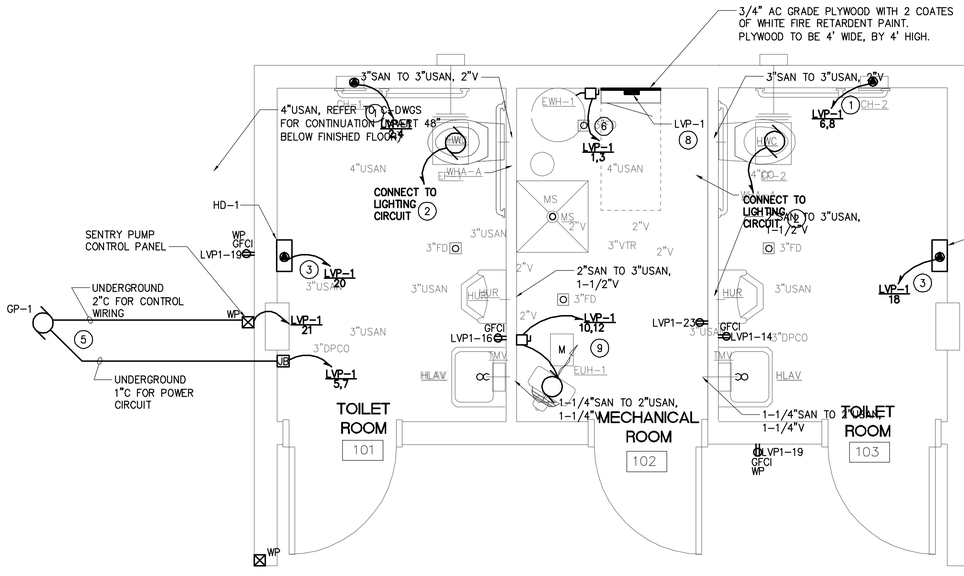

THE BUILDING WILL BE DRAINED AND WINTERIZED EACH FALL

FLOOR PLAN – ELECTRICAL POWER PLAN

SCALE: 1/2" = 1'-0"

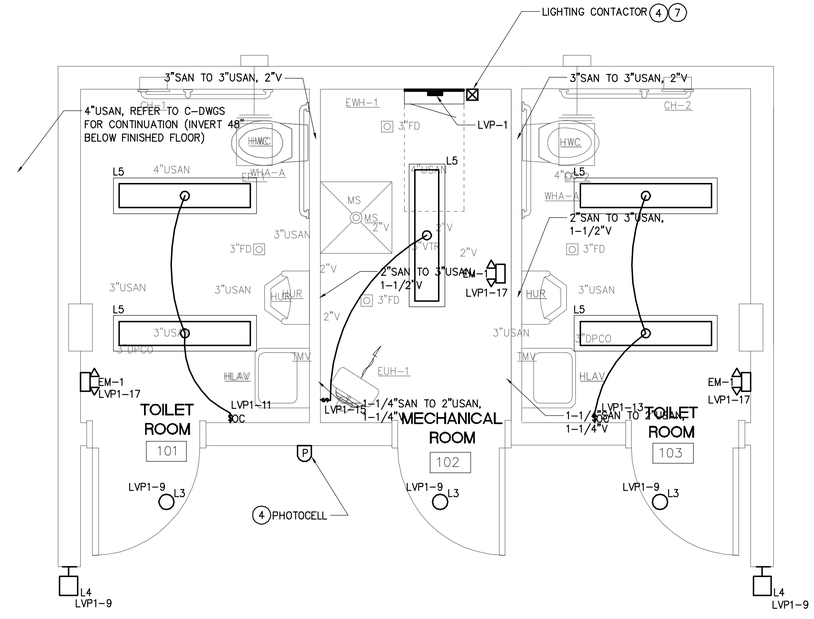

THE BUILDING WILL BE DRAINED AND WINTERIZED EACH FALL

FLOOR PLAN – LIGHTING PLAN

SCALE: 1/2" = 1'-0"

Drawing Copyright © 2015

CHA
6 Campus Drive
Parsippany, NJ 07054-4406
973.539.3125 · www.chacompanies.com

IT IS A VIOLATION OF LAW FOR ANY PERSON, UNLESS THEY ARE ACTING UNDER THE DIRECTION OF A LICENSED PROFESSIONAL ENGINEER, ARCHITECT, LANDSCAPE ARCHITECT OR LAND SURVEYOR, TO ALTER AN ITEM IN ANY WAY. IF AN ITEM BEARING THE STAMP OF A LICENSED PROFESSIONAL IS ALTERED, THE ALTERING ENGINEER, ARCHITECT, LANDSCAPE ARCHITECT OR LAND SURVEYOR SHALL STAMP THE DOCUMENT AND INCLUDE THE NOTATION "ALTERED BY" FOLLOWED BY THEIR SIGNATURE, THE DATE OF SUCH ALTERATION, AND A SPECIFIC DESCRIPTION OF THE ALTERATION.

PIONEERS

WILLIAM PATERSON UNIVERSITY

SOCCER FIELD IMPROVEMENTS

300 POMPTON RD.
WAYNE, NJ 07470

No.	Submittal / Revision	App'd.	By	Date
1	CONSTRUCTION DOCUMENTS			01/11/16

RESTROOM BUILDING ELECTRICAL PLAN

Designed By:	Drawn By:	Checked By:
SR	LH	JD
Issue Date:	Project No:	Scale:
01/11/2016	30059	AS SHOWN

Drawing No.:

E-1

File: V:\PROJECTS\ANY\K4\30059\CADD_ACAD\E-1-30059.DWG
Saved: 1/7/2016 4:00:22 PM Plotted: 1/13/2016 2:08:25 PM Current User: Merkelin, Tim LastSavedBy: 3840