© COPYRIGHT This drawing is the property of SNS Architects & Engineers, PC. It is subject to copyright laws and shall not be used or copied without express written permission.

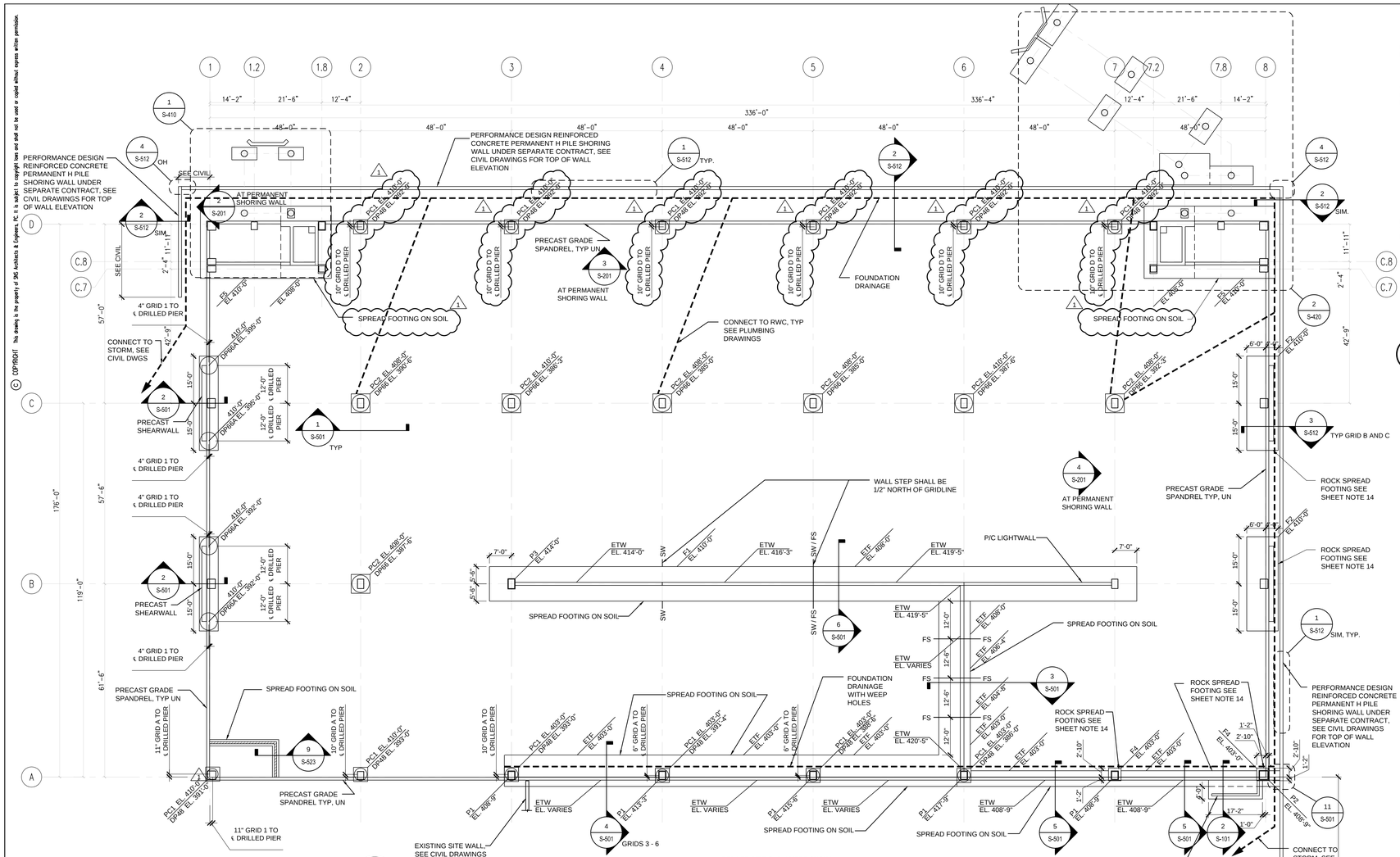

1 FOUNDATION PLAN

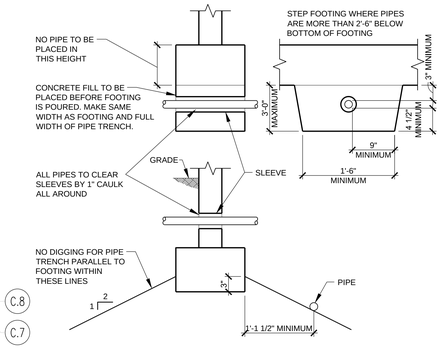

7 PIPE @ WALL & FOOTING DETAIL

SHEET NOTES:
1. REFER TO SHEET S-001 AND S-002 FOR GENERAL NOTES.
2. PROVIDE 3" CLEAR COVER FOR ALL BOTTOM REINFORCEMENT AND 2" CLEAR COVER FOR ALL TOP REINFORCEMENT, UN.
3. AT LOCATIONS WHERE P/C WALLS ARE SUPPORTED ON FOUNDATIONS PROVIDE EMBEDDED PLATES IN FOUNDATIONS, COORDINATE WITH PRECAST SUPPLIER, SEE 7/S-524.
4. ANCHOR BOLTS, PLATES WITH WELDED ANCHORS, REINFORCING BAR CAGES WITH NMB SPLICES (OR SIMILAR) OR ANY OTHER CONNECTIONS MATERIALS THAT CONNECT THE PRECAST CONCRETE MEMBERS TO THE CIP CONCRETE FOUNDATIONS ARE TO BE SUPPLIED BY THE PRECAST SUPPLIER AND INSTALLED BY THE GENERAL CONTRACTOR. WARNING TO GENERAL CONTRACTOR: COORDINATE WITH PRECAST SUPPLIER TO FULLY UNDERSTAND THE LARGE MAGNITUDE OF THE EMBEDS TO BE INSTALLED AND THE VERY TIGHT TOLERANCES REQUIRED!
5. THE GENERAL CONTRACTOR IS RESPONSIBLE FOR THE DESIGN AND CONSTRUCTION OF ALL TEMPORARY AND PERMANENT EXCAVATION BRACING, SHEETING AND SHORING.
6. COORDINATE PENETRATIONS IN GRADE BEAMS & P/C MEMBERS WITH MEP AND CIVIL DRAWINGS, SHOW PENETRATIONS ON ALL SHOP DRAWINGS. SEE DETAIL 7/S-100.
7. INTERCONNECTING GRADE BEAMS MUST BE FINISHED IN THEIR ENTIRETY BEFORE P/C IS TO BE ERECTED.
8. FOR UTILITIES NEAR SPREAD FOOTINGS AND WALLS SEE 7/S-100.
9. SEE CIVIL DRAWINGS FOR EXTERIOR GRADES, UTILITIES, ADJACENT STRUCTURES, AND PROPERTY LINES. NOTIFY ENGINEER OF ANY CONFLICTS IMMEDIATELY.
10. VERIFY ALL DIMENSIONS WITH ARCHITECTURAL DRAWINGS.
11. SEE DRAWINGS S-101 FOR GRADE SLAB AND SUBGRADE INFORMATION.
12. FOR ANCHOR BOLT REQUIREMENTS, SEE 1/S-550.
13. CONTRACTOR TO PROTECT SUBGRADE FROM DAMAGE DUE TO WEATHER.
14. ESTIMATED ROCK ELEVATION IS AT OR NEAR THE BOTTOM OF SPREAD FOOTING. EXCAVATE INTO ROCK 12" MIN AND PROVIDE 2000 PSI LEAN CONCRETE UP TO BEARING ELEVATION. PLEASE CONTACT ENGINEER IF ROCK IS NOT ENCOUNTERED.
15. ▨ INDICATES CMU WALL CONSTRUCTION, SEE SHEET S-523. SEE ARCHITECTURAL DRAWINGS FOR DIMENSIONS AND FINISH.

FOOTING SCHEDULE — SEE 6/ S-100 AND 8/S-501 TYPICAL

MARK	LENGTH	WIDTH	DEPTH	REINFORCING LONG	REINFORCING TRANS
F1	CONT	11'-0"	4'-0"	(12) #9 TOP & BOTTOM	#9 AT 12" OC BOTTOM #5 AT 18" OC TOP
F2	30'-0"	10'-0"	4'-0"	(10) #7 TOP & BOTTOM	#9 AT 6" OC BOTTOM #9 AT 12" OC TOP
F3	3'-0"	3'-0"	1'-6"	(4) #5	(4) #5
F4	4'-0"	4'-0"	2'-0"	(5) #6	(5) #6
F5	41'-8"	23'-0"	3'-0"	#9 AT 6" OC TOP & BOTTOM	#9 AT 6" OC TOP & BOTTOM
F6	8'-0"	4'-0"	2'-0"	(5) #7	(11) #7
F7	16'-0"	10'-0"	3'-0"	(10) #8	(20) #8
F8	10'-0"	6'-0"	2'-0"	(6) #7	(13) #7
F9	14'-0"	6'-0"	3'-0"	(6) #8	(20) #8

FOOTING NOTES:
1. ALL REINFORCING SHALL BE PLACED AT EVEN SPACING UN.
2. FOOTINGS ARE CENTERED ON GRID UN.
3. MINIMUM "ROCK SPREAD FOOTING" BEARING CAPACITY SHALL BE 80,000 PSF AS VERIFIED BY TESTING AGENCY. EXCAVATE ROCK 12" MIN AND PROVIDE 2000 PSI LEAN CONCRETE MAT FOR FORMING AND BEARING.
4. MINIMUM SPREAD FOOTING ON COMPACTED SOIL BEARING CAPACITY SHALL BE 6000 PSF AS VERIFIED BY TESTING AGENCY.
5. FULLY DEVELOP CONTINUOUS FOOTING REINFORCING INTO ADJACENT FOOTINGS. SEE S-601 FOR DEVELOPMENT LENGTHS.

CIP PIER SCHEDULE

MARK	SIZE LENGTH	SIZE WIDTH	TYPE	LONGITUDINAL REINF	LATERAL TIES SIZE	LATERAL TIES SPACING	DOWELS	REMARKS
P1	2'-11"	2'-4"	A	(8) #10	#4	18" OC	(8) #10	SEE 7/ S-550 AND 10/S-550 TYPICAL
P2	3'-1"	3'-1"	B	(12) #10	#4	18" OC	(12) #10	SEE 7/ S-550 AND 10/S-550 TYPICAL
P3	3'-4"	2'-4"	B	(12) #9	#4	18" OC	(12) #9	SEE 7/ S-550 AND 10/S-550 TYPICAL

CIP PIER NOTES:
1. ALL REINFORCING SHALL BE PLACED AT EVEN SPACING, UNO.
2. (3) TIES AT 3" TOP AND BOTTOM.
3. PIER IS CENTERED UNDER P/C COLUMN UNO.
4. DOWELS ARE MINIMUM, SEE DETAILS FOR ADDITIONAL REQUIREMENTS.
5. CONTINUE ADJACENT WALL REINF. THROUGH CIP PIER UNO.
6. SEE 9/S-501 FOR SUBGRADE WALL TO PIER DETAIL.

DRILLED PIER SCHEDULE — SEE 2 AND 3/S-100

MARK	SHAFT DIAMETER	SHAFT VERT REINF	SHAFT TIES	SHAFT REINF LENGTH	REMARKS
DP48	4'-0"	(7) #10	#4 AT 18" OC	12'-0"	
DP66	5'-6"	(11) #11	#4 AT 18" OC	17'-0"	DP66A = FULL LENGTH REINF.

DRILLED PIER NOTES:
1. ALL REINFORCING SHALL BE PLACED AT EVEN SPACING, UN.
2. DRILLED PIERS ARE CENTERED ON GRID LINES, UN. (NOT AT GRID A.)
3. BOTTOM OF DRILLED PIER LOCATIONS ARE FOR BIDDING PURPOSES ONLY. FINAL BOTTOM ELEVATIONS SHALL BE DETERMINED BY GEOTECHNICAL ENGINEER BASED ON MEETING SOIL BEARING COMPACITY.
4. MAXIMUM INSTALLED DRILLED PIER ECCENTRICITY FROM DESIGN SHALL BE 3".

DRILLED PIER CAP SCHEDULE — SEE 3/S-100

DRILLED PIER CAP MARK	LENGTH	WIDTH	DEPTH	REINFORCING LONG	REINFORCING TRANS	REINFORCING HORIZONTAL	DETAIL	REMARKS
PC1	4'-6"	4'-6"	3'-6"	#5 AT 12" OC TOP & BOTTOM	#5 AT 12" OC TOP & BOTTOM			DRILLED PIER REINF. EXTENDS THRU PIER CAP
PC2	6'-0"	6'-0"	3'-6"	#5 AT 12" OC TOP & BOTTOM	#5 AT 12" OC TOP & BOTTOM			DRILLED PIER REINF. EXTENDS THRU PIER CAP

DRILLED PIER CAP NOTES:
1. ALL REINFORCING SHALL BE PLACED AT EVEN SPACING, UN.
2. DRILLED PIER CAPS ARE CENTERED OVER DRILLED PIER, UN.

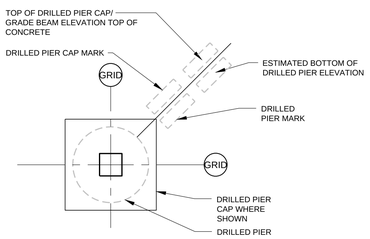

NOTES:
1. SEE DRILLED PIER SCHEDULE AND DRILLED PIER NOTES FOR ADDITIONAL INFORMATION.
2. SEE DRILLED PIER CAP SCHEDULE FOR ADDITIONAL INFORMATION.
3. FOR TOP OF DRILLED PIER SEE 3/S-100.

2 FOUNDATION LEGEND (FOR DRILLED PIERS)

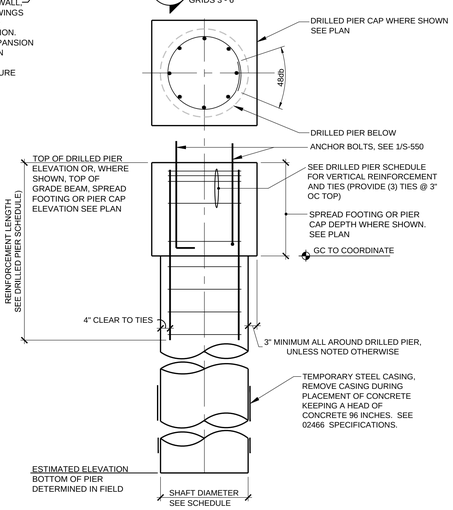

3 DRILLED PIER AND CAP DETAIL

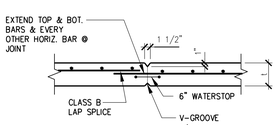

4 VERTICAL CONSTRUCTION JOINT

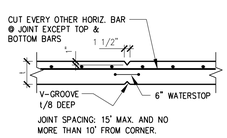

5 VERTICAL CONTROL JOINT

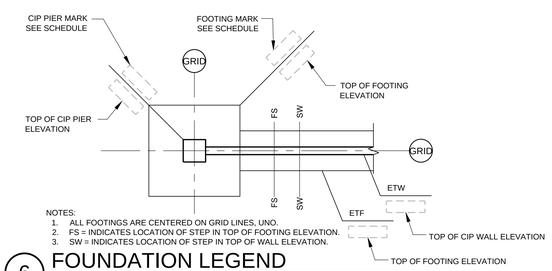

NOTES:
1. ALL FOOTINGS ARE CENTERED ON GRID LINES, UNO.
2. FS = INDICATES LOCATION OF STEP IN TOP OF FOOTING ELEVATION.
3. SW = INDICATES LOCATION OF STEP IN TOP OF WALL ELEVATION.

6 FOUNDATION LEGEND

Revisions

Date	Issue	Description
07-19-12	1	ISSUED FOR DCA FILING
09-18-12	2	ISSUED FOR CONTRACTOR BIDDING
11-14-12	1	ADDENDUM #8

Key Plan

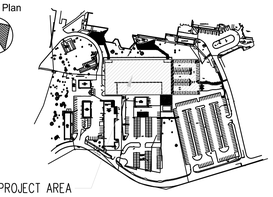

Consultants

WALKER PARKING CONSULTANTS
WALKER NO. 18-1086.00

JAMES WILLIAM PUDLEINER P.E.
N.J. P.E. 24GE04742200

Consultants

TMG Engineering Inc.
Consulting Mechanical and Electrical Engineers
1090 King Georges Post Rd.
Suite No. 903
Edison, New Jersey 08837
Phone: 732-738-9670
Fax: 732-738-9672
New Jersey Certificate of Authorization Number 24GA28081900

FRANK S. RADOSIN N.J.P.E. 33923
TMG JOB NUMBER 11-158

Project

New Parking Garage
at
William Paterson University
East Road Parking Lot 1
Wayne, New Jersey 07470
Project # WP-10-03-99A

Client

William Paterson University
Office of Capital Planning, Design & Construction
300 Pompton Road
Wayne, New Jersey 07474

SNS Architects & Engineers, PC
1 PARAGON DRIVE . MONTVALE . NEW JERSEY. 07645
TEL: 201.573.1767 FAX: 201.573.0808 www.sns-arch-eng.com

Fay W. Logan, AIA
John M. Lignos, AIA
Lorin J. Sonenshine, AIA
Steven Napolitano, PE

Cert./Lic. No. 10798

Date	10-31-2011	Scale	AS NOTED
Drawn By	LRM	Checked By	JMP

Dwg. Title
FOUNDATION PLAN

Work Order No. 4242
Dwg. No. S-100

Nov 14, 2012 - 10:55am J:\18-1086-00-William_Paterson_University\Acad\04-Struct\10865-100.dwg