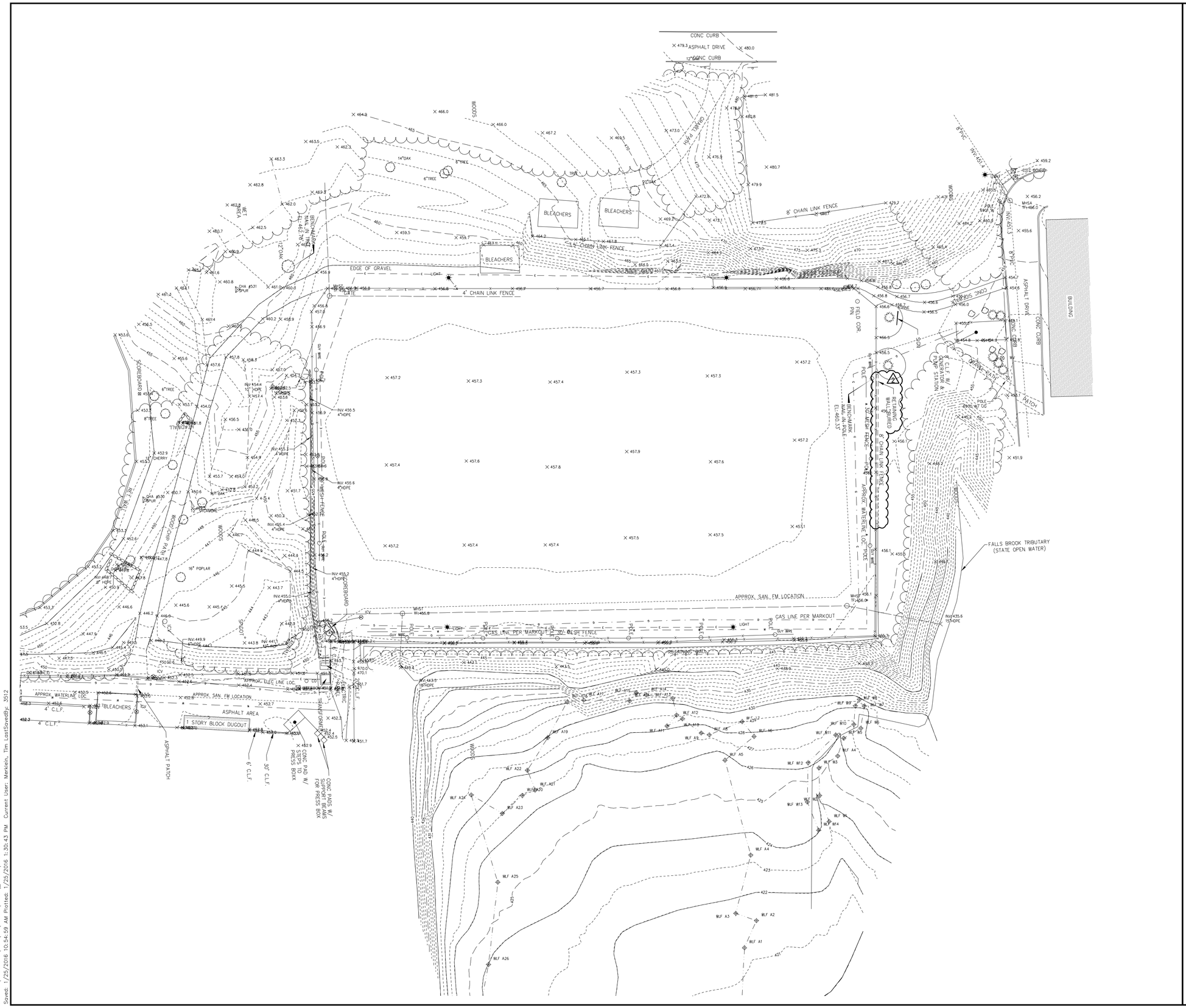

NOTES:

1. BASE MAPPING PREPARED BY CHA FROM A MAY 2015 FIELD SURVEY.
2. NORTH ORIENTATION IS TRUE NORTH BASED ON GPS OBSERVATION TAKEN AT THE TIME OF THE FIELD SURVEY. MAPPING PREPARED ON NAD83 NEW JERSEY STATE PLANE, US FOOT.
3. CONTOURS AND ELEVATIONS ARE SHOWN ON NAVD88 VERTICAL DATUM BASED ON GPS OBSERVATIONS.
4. UNDERGROUND UTILITIES, STRUCTURES AND FACILITIES HAVE BEEN SHOWN FROM SURFACE LOCATIONS COMBINED WITH AVAILABLE RECORD PLANS. THEIR ACTUAL LOCATION MAY VARY SOMEWHAT FROM WHAT IS SHOWN AND OTHERS MAY EXIST. SIZE, TYPE AND LOCATION OF ALL UTILITIES AND STRUCTURES MUST BE VERIFIED BY PROPER AUTHORITIES PRIOR TO ANY AND ALL CONSTRUCTION. CALL DIG SAFE PRIOR TO ANY EXCAVATION.
5. WETLAND DELINEATION COMPETED BY CHA ON 5-27-15.

Drawing Copyright © 2015

CHA
6 Campus Drive
Parsippany, NJ 07054-4406
973.538.3320 · www.chacompanies.com

PETER L. LILHOLT, JR.
PROFESSIONAL ENGINEER N.J. LIC.
24GE04894200

IT IS A VIOLATION OF LAW FOR ANY PERSON, UNLESS THEY ARE ACTING UNDER THE DIRECTION OF A LICENSED PROFESSIONAL ENGINEER, ARCHITECT, LANDSCAPE ARCHITECT OR LAND SURVEYOR TO ALTER AN ITEM IN ANY WAY. IF AN ITEM BEARING THE STAMP OF A LICENSED PROFESSIONAL IS ALTERED, THE ALTERING ENGINEER, ARCHITECT, LANDSCAPE ARCHITECT OR LAND SURVEYOR SHALL STAMP THE DOCUMENT AND INCLUDE THE NOTATION "ALTERED BY" FOLLOWED BY THEIR SIGNATURE, THE DATE OF SUCH ALTERATION, AND A SPECIFIC DESCRIPTION OF THE ALTERATION.

PIONEERS

WILLIAM PATERSON UNIVERSITY

SOCCER FIELD IMPROVEMENTS

300 POMPTON RD.
WAYNE, NJ 07470

No.	Submittal / Revision	App'd.	By	Date
2	ADD. NO. 1	DD	TM	01/25/16
1	CONSTRUCTION DOCUMENTS	DD	TM	01/11/16

EXISTING CONDITIONS PLAN

Designed By:	Drawn By:	Checked By:
WM	TM	DD
Issue Date: 01/11/2016	Project No: 30059	Scale: AS SHOWN

Drawing No.:
C-002

File: \\PROJECTS\ANYK4\30059\CADD_ACAD\C002-30059.DWG
Saved: 1/25/2016 10:54:59 AM Plotted: 1/25/2016 1:30:43 PM Current User: Menkein, Tim LastSavedBy: 3512

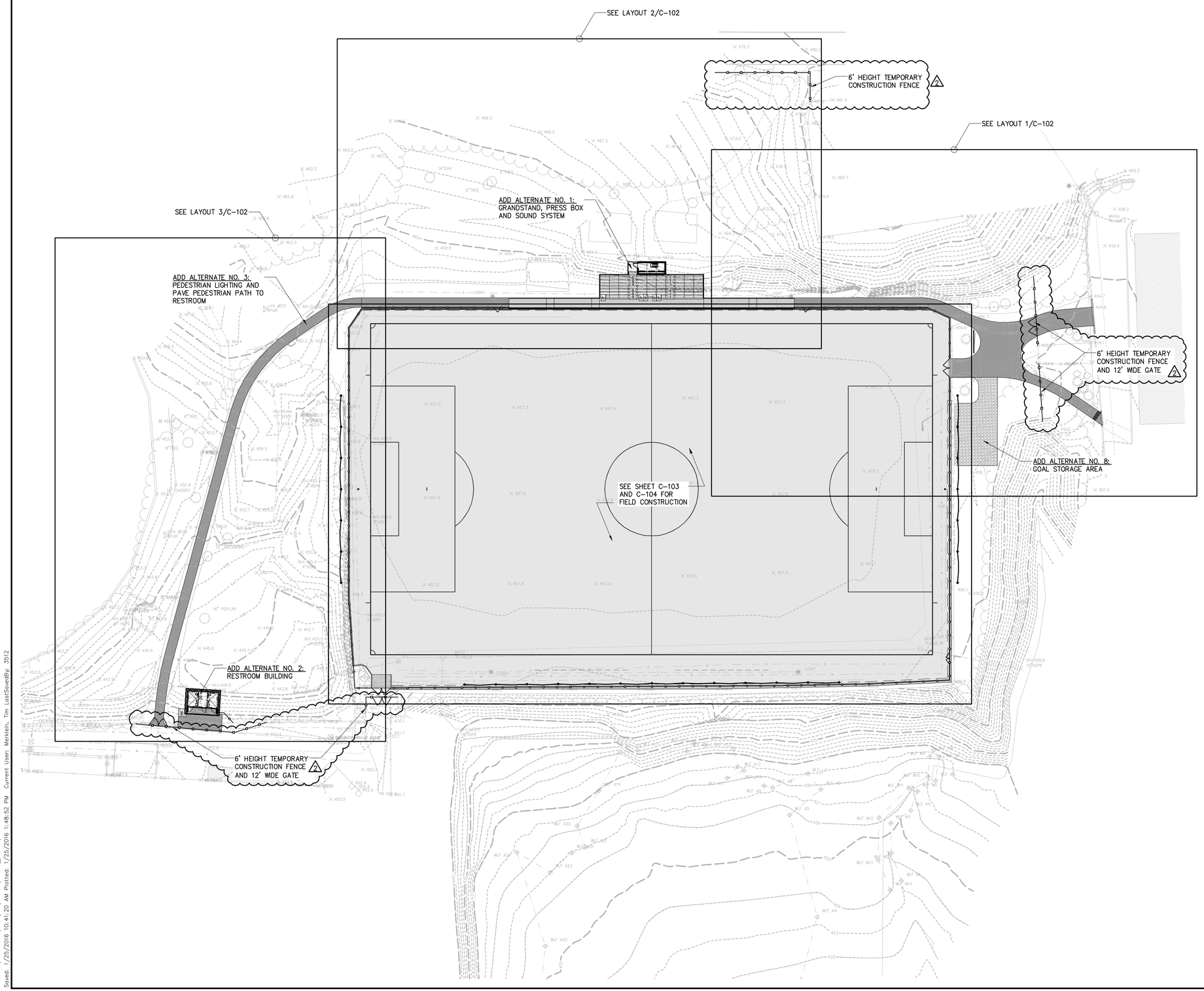

LEGEND

- SYNTHETIC TURF
- CONCRETE
- ASPHALT
- CHAIN LINK FENCE
- TEMPORARY CONSTRUCTION FENCE

NOTES:

1. VERIFY ALL SITE CONDITIONS AND DIMENSIONS SHOWN ON THE PLANS PRIOR TO COMMENCEMENT OF WORK. NOTIFY OWNER AND ITS REPRESENTATIVES OF ANY DISCREPANCIES OR IRREGULAR CONDITIONS.
2. CONTRACTOR TO SUBMIT SHOP DRAWING SHOWING ALL ELEMENTS PER SPECIFICATIONS.
3. REFERENCE SHEET C-402 FOR LOCATION OF QUICK COUPLERS, CONDUITS, & VAULT BOXES, ADJACENT TO OR WITHIN FIELD AREA.
4. THE CONTRACTOR SHALL BE RESPONSIBLE FOR PROVIDING ALL FIELD LAYOUT. THE CONTRACTOR SHALL TAKE TIES TO ALL UTILITY CONNECTIONS AND PROVIDE MARKED-UP RECORD PLANS FOR ALL UTILITIES INSTALLED OR ENCOUNTERED PER SPECIFICATIONS.
5. THE CONTRACTOR SHALL PROVIDE SMOOTH TRANSITIONS BETWEEN NEW WORK AND EXISTING CONDITIONS.

0 30' 60'
Scale in feet

Drawing Copyright © 2015

CHA
6 Campus Drive
Parsippany, NJ 07054-4406
973.538.3320 • www.chacompanies.com

PETER L. LILHOLT, JR.
PROFESSIONAL ENGINEER N.J. LIC.
24GE04894200

IT IS A VIOLATION OF LAW FOR ANY PERSON, UNLESS THEY ARE ACTING UNDER THE DIRECTION OF A LICENSED PROFESSIONAL ENGINEER, ARCHITECT, LANDSCAPE ARCHITECT OR LAND SURVEYOR TO ALTER AN ITEM IN ANY WAY. IF AN ITEM BEARING THE STAMP OF A LICENSED PROFESSIONAL IS ALTERED, THE ALTERING ENGINEER, ARCHITECT, LANDSCAPE ARCHITECT OR LAND SURVEYOR SHALL AFFIX TO THE ITEM THE SEAL AND THE NOTATION "ALTERED BY" FOLLOWED BY THEIR SIGNATURE, THE DATE OF SUCH ALTERATION, AND A SPECIFIC DESCRIPTION OF THE ALTERATION.

PIONEERS

WILLIAM PATERSON UNIVERSITY

SOCCER FIELD IMPROVEMENTS

300 POMPTON RD.
WAYNE, NJ 07470

No.	Submittal / Revision	App'd.	By	Date
2	ADD. NO. 1	DD	TM	01/25/16
1	CONSTRUCTION DOCUMENTS	DD	TM	01/11/16

OVERALL SITE LAYOUT PLAN

Designed By:	Drawn By:	Checked By:
WM	TM	DD
Issue Date: 01/11/2016	Project No: 30059	Scale: AS SHOWN

Drawing No.:
C-101

File: V:\PROJECTS\ANY\K4\30059\CADD_ACAD\C101-103-30059.DWG
Saved: 1/25/2016 10:41:20 AM Plotted: 1/25/2016 1:48:52 PM Current User: Merkelin, Tim LastSavedBy: 3512

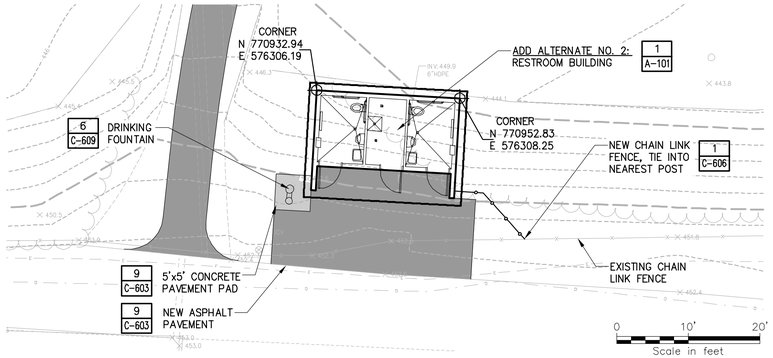

4 ENLARGED RESTROOM BUILDING

PLAN SCALE: 1" = 10'-0"

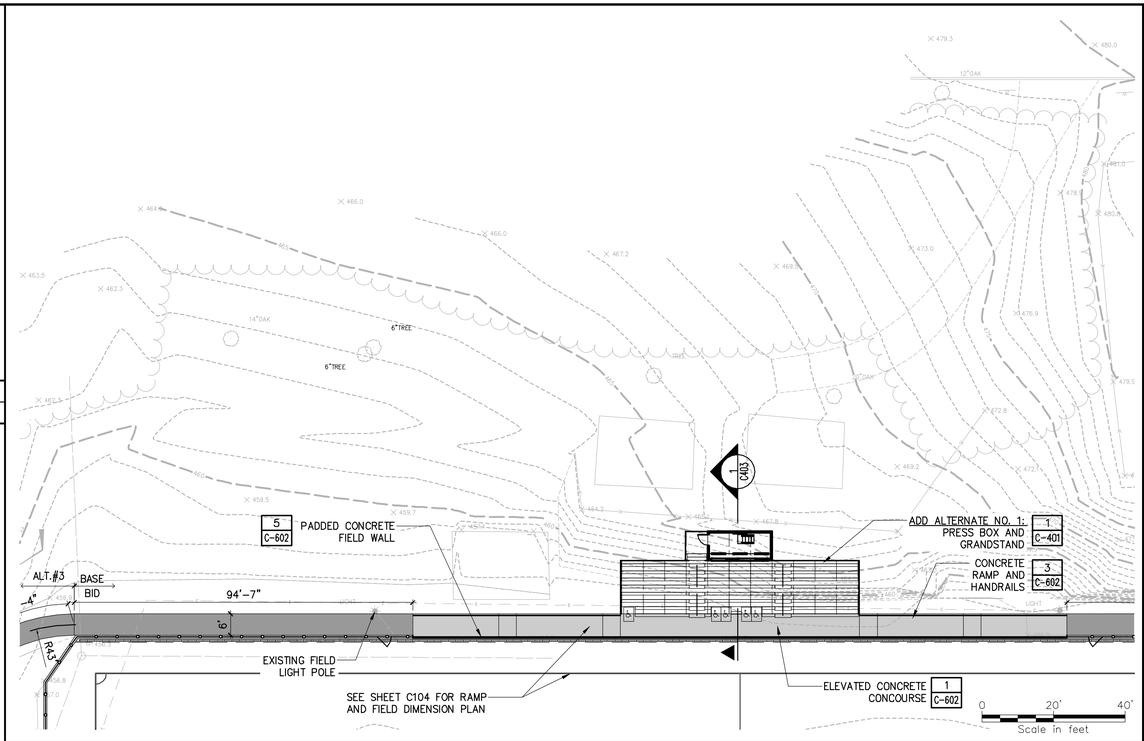

2 GRANDSTAND, RAMP AND WEST PATH

PLAN SCALE: 1" = 20'-0"

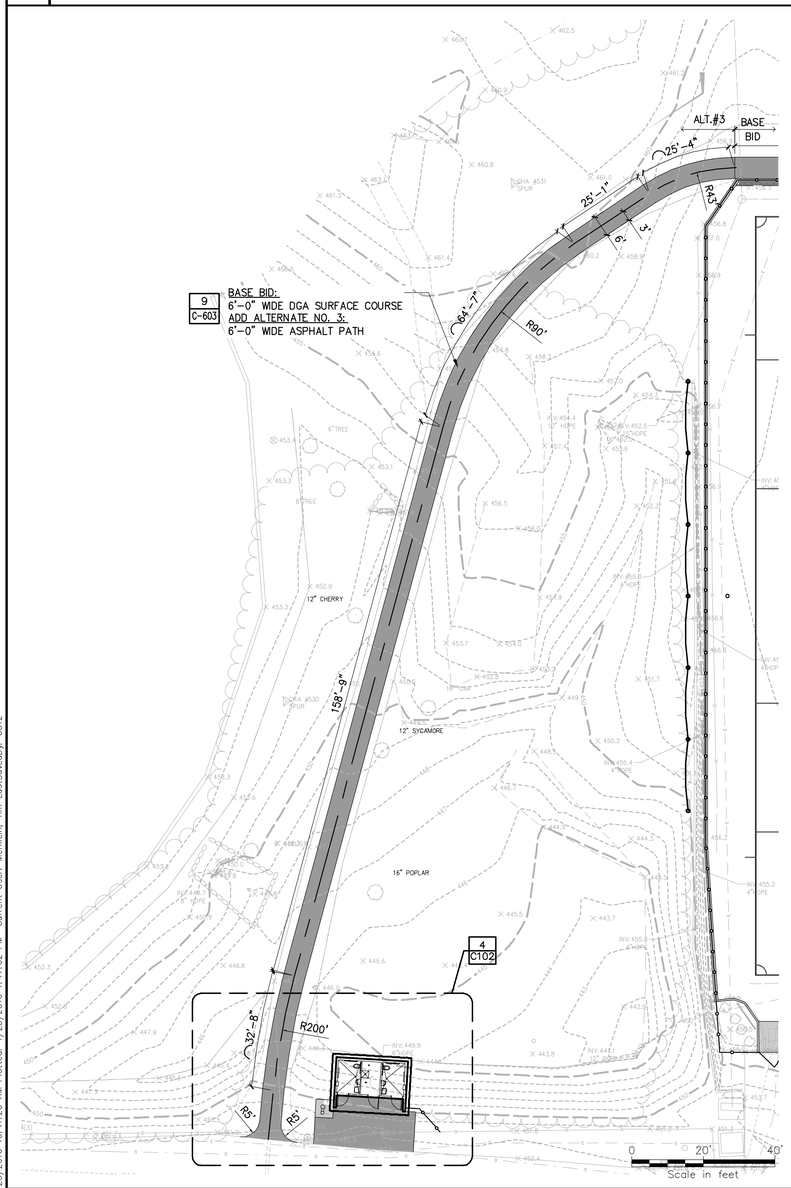

3 SOUTH PATH AND RESTROOM BUILDING

PLAN SCALE: 1" = 10'-0"

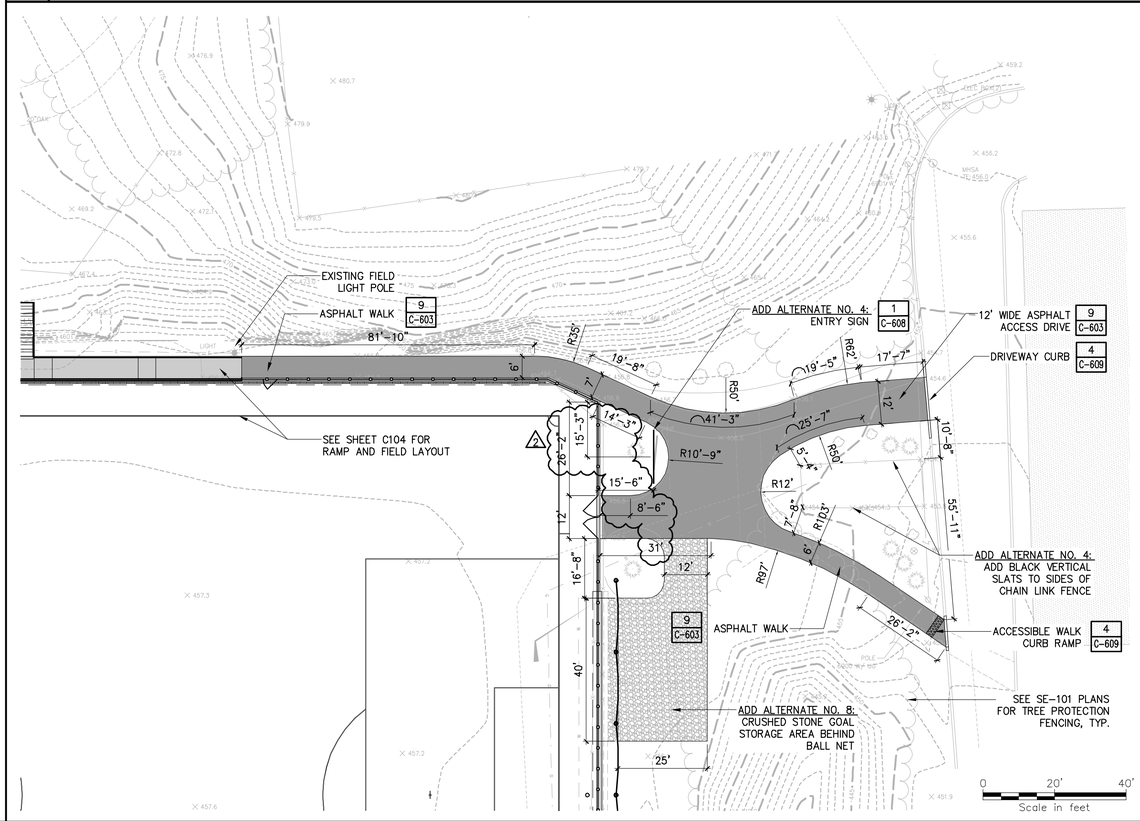

1 NORTH SIDEWALK AND ACCESS DRIVE

PLAN SCALE: 1" = 20'-0"

LEGEND

CONCRETE

ASPHALT

CHAIN LINK FENCE

NOTES:

1. SEE SHEET C-101 FOR GENERAL SITE LAYOUT NOTES.

Drawing Copyright © 2015

CHA
5 Campus Drive
Parsippany, NJ 07054-4406
973.538.1320 • www.chacompanies.com

PETER L. LILHOLT, JR.
PROFESSIONAL ENGINEER N.J. LIC.
24GE04894200

IT IS A VIOLATION OF LAW FOR ANY PERSON, UNLESS THEY ARE ACTING UNDER THE DIRECTION OF A LICENSED PROFESSIONAL ENGINEER, ARCHITECT, LANDSCAPE ARCHITECT OR LAND SURVEYOR TO ALTER AN ITEM IN ANY WAY. IF AN ITEM BEARING THE STAMP OF A LICENSED PROFESSIONAL IS ALTERED, THE ALTERING LICENSEE SHALL ATTACH A DESCRIPTION OF THE ALTERATION. THE SURVEYOR SHALL STAMP THE DOCUMENT AND INCLUDE THE NOTATION "ALTERED BY" FOLLOWED BY THEIR SIGNATURE, THE DATE OF SUCH ALTERATION, AND A SPECIFIC DESCRIPTION OF THE ALTERATION.

PIONEERS

WILLIAM PATERSON UNIVERSITY

SOCCER FIELD IMPROVEMENTS

300 POMPTON RD.
WAYNE, NJ 07470

No.	Submittal / Revision	App'd.	By	Date
2	ADD. NO. 1	DD	TM	01/25/16
1	CONSTRUCTION DOCUMENTS	DD	TM	01/11/16

SITE LAYOUT PLAN

Designed By:	Drawn By:	Checked By:
WM	TM	DD
Issue Date:	Project No:	Scale:
01/11/2016	30059	AS SHOWN

Drawing No.:

C-102

File: V:\PROJECTS\ANY\K4\30059\CADD_ACAD\C101-103-30059.DWG
Saved: 1/25/2016 10:41:20 AM Plotted: 1/25/2016 1:47:02 PM Current User: Merkelin, Tim LastSavedBy: 3512

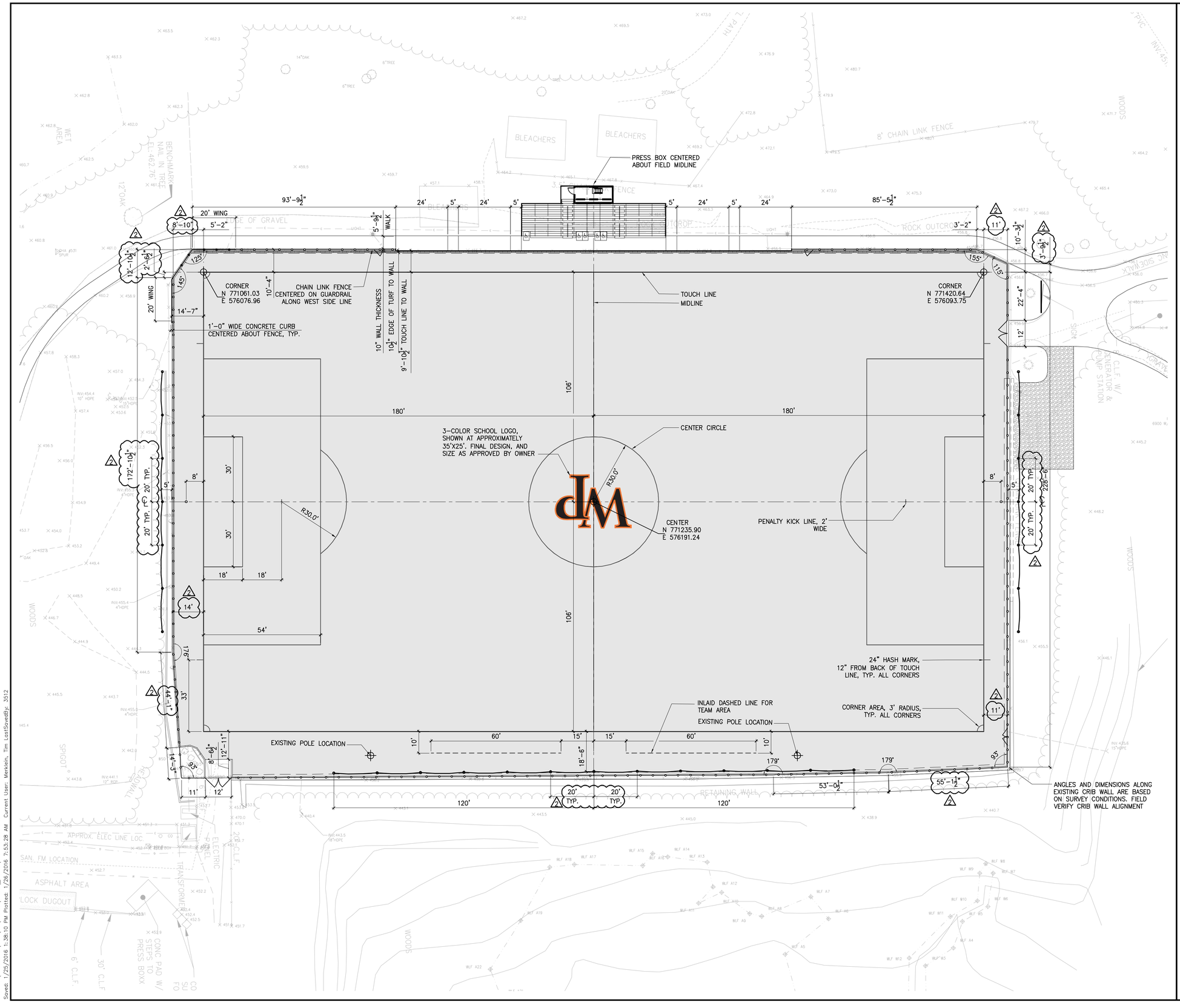

LEGEND

SYNTHETIC TURF

NOTES:

1. ALL ANGLES ARE 90° UNLESS OTHERWISE INDICATED.
2. ALL LINES SHALL BE 4" WIDE UNLESS OTHERWISE INDICATED.
3. ALL MARKINGS SHALL CONFORM WITH THE LATEST EDITION OF NCAA RULES.
4. LINES SHALL BE WHITE, AND TUFTED OR INLAID PER SPECIFICATIONS.
5. TOUCH LINE AND GOAL LINE FIELD DIMENSIONS ARE TO THE OUTSIDE EDGE OF THE 4" LINES.
6. SOCCER PLAYING FIELD LINES ARE SYMMETRICAL ABOUT FIELD CENTERLINE AND MIDLINE.

0 20' 40'
Scale in feet

Drawing Copyright © 2015

CHA
6 Campus Drive
Parsippany, NJ 07054-4406
973.538.1320 · www.chacompanies.com

PETER L. LILHOLT, JR.
PROFESSIONAL ENGINEER N.J. LIC.
24GE04894200

IT IS A VIOLATION OF LAW FOR ANY PERSON, UNLESS THEY ARE ACTING UNDER THE DIRECTION OF A LICENSED PROFESSIONAL ENGINEER, ARCHITECT, LANDSCAPE ARCHITECT OR LAND SURVEYOR TO ALTER AN ITEM IN ANY WAY. IF AN ITEM BEARING THE STAMP OF A LICENSED PROFESSIONAL IS ALTERED, THE ALTERING ENGINEER, ARCHITECT, LANDSCAPE ARCHITECT OR LAND SURVEYOR SHALL STAMP THE DOCUMENT AND INCLUDE THE NOTATION "ALTERED BY" FOLLOWED BY THEIR SIGNATURE, THE DATE OF SUCH ALTERATION, AND A SPECIFIC DESCRIPTION OF THE ALTERATION.

PIONEERS

WILLIAM PATERSON UNIVERSITY

SOCCER FIELD IMPROVEMENTS

300 POMPTON RD.
WAYNE, NJ 07470

No.	Submittal / Revision	App'd.	By	Date
2	ADD. NO. 1	DD	TM	01/25/16
1	CONSTRUCTION DOCUMENTS	DD	TM	01/11/16

FIELD DIMENSION PLAN

Designed By:	Drawn By:	Checked By:
WM	TM	DD
Issue Date: 01/11/2016	Project No: 30059	Scale: AS SHOWN

Drawing No.:
C-104

File: V:\PROJECTS\ANY\K4\30059\CADD_ACAD\C104-30059.DWG
Saved: 1/25/2016 1:38:10 PM Plotted: 1/25/2016 7:53:28 AM Current User: Merkelin, Tim LastSavedBy: 3512

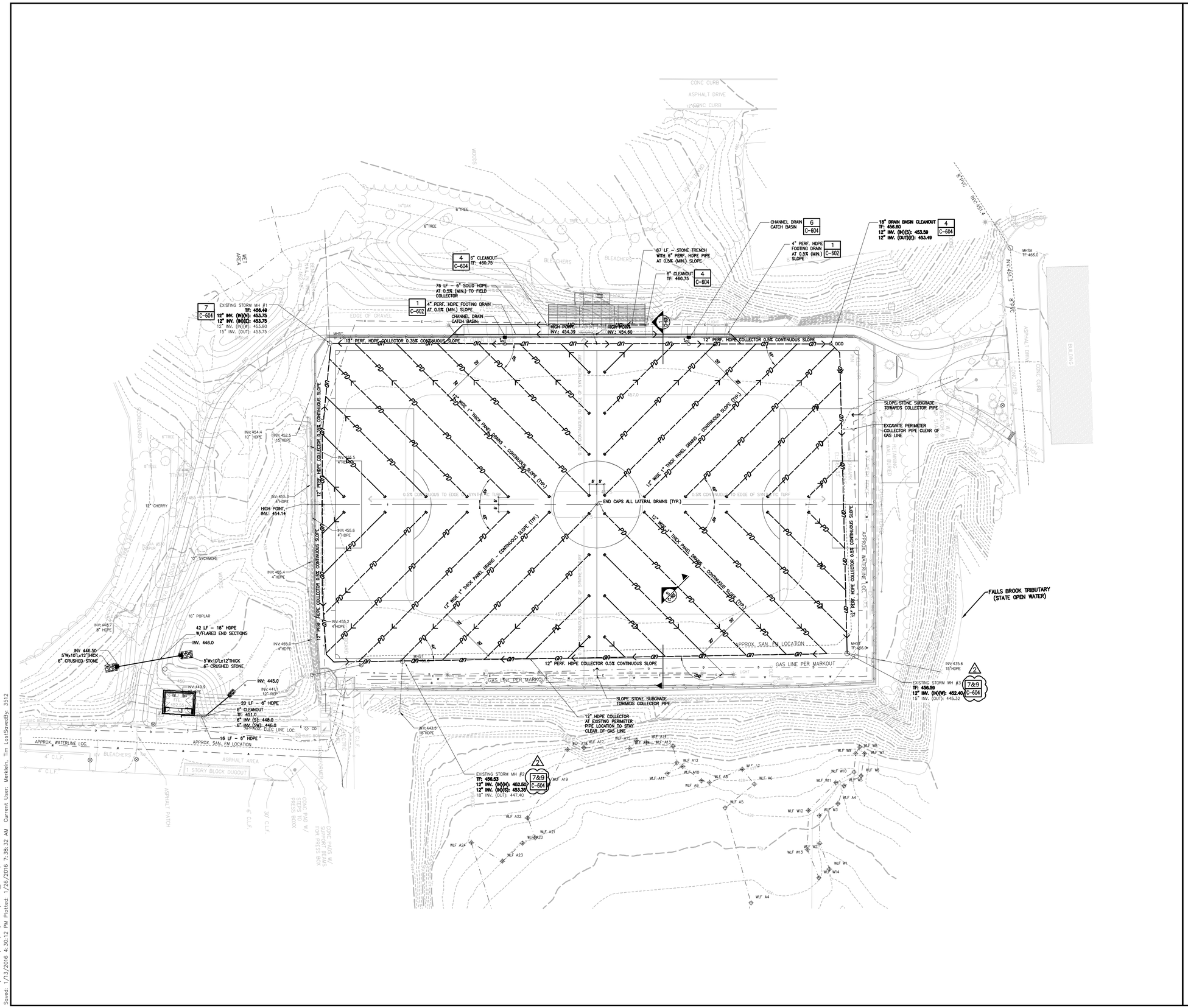

LEGEND

—— UD ——<	COLLECTOR DRAIN PIPE
—— PD 218 ——<	PANEL DRAIN
DCO ○	DRAIN BASIN CLEANOUT

NOTES:

1. PERIMETER COLLECTOR PIPE TO BE HDPE, PERFORATED AND SIZED AS SHOWN.

2. LATERAL TRENCHES WITH PANEL DRAINS ARE SPACED 20 FEET ON CENTER, EXCEPT WHERE INDICATED.

3. CAP ENDS OF ALL PANEL DRAINS. PLACE WASHER/BOLT ON END OF CAP FOR METAL DETECTION.

4. FIELD COLLECTOR AND PANEL DRAINS TO SLOPE AS INDICATED.

5. GEOTEXTILE FABRIC TO BE PLACED AT BOTTOM AND SIDES OF COLLECTOR PIPE AND LATERAL TRENCHES.

6. PLAYING FIELD CONTRACTOR TO COORDINATE AND BE AWARE OF SITE STORM PIPING AND STRUCTURES WITHIN THE CONSTRUCTION BOUNDARIES AS SHOWN ON THE DRAWINGS.

7. CONTRACTOR TO PROTECT DRAINAGE LINES DURING CONSTRUCTION FROM DEBRIS, INCLUDING SOIL OR GRAVEL MATERIAL OR OTHER TRASH FROM ENTERING OR BLOCKING LINES.

8. CONTRACTOR TO AVOID TRAFFIC OVER INSTALLED DRAINAGE TRENCHES TO PREVENT CRUSHING OF PIPE.

9. COLLECTOR PIPE TO BE LOCATED 5' FROM EDGE OF CHANNEL DRAIN AND AS SHOWN ON DRAWINGS, RE: 1/C-601.

10. COORDINATE DRAINAGE CONNECTION AND INVERTS WITH EXISTING, IN-PLACE CONDITIONS. VERIFY EXISTING INVERTS BEFORE INSTALLATION.

11. CONTRACTOR SHALL CONTACT ENGINEER IMMEDIATELY IF DISCREPANCIES ARE FOUND IN FIELD.

12. EXCESS TOPSOIL SHALL BE STOCKPILED ON SITE OR BE DISPOSED, AS DIRECTED BY THE OWNER. CONTRACTOR TO COORDINATE WITH OWNER.

13. STONE SUBGRADE BELOW SYNTHETIC TURF SHALL BE SLOPED AWAY FROM RETAINING WALL AND TOWARDS 12" HDPE COLLECTOR PIPE.

0 30' 60'
Scale in feet

Drawing Copyright © 2015

CHA
6 Campus Drive
Parsippany, NJ 07054-4406
973.538.1320 • www.chacompanies.com

PETER L. LILHOLT, JR.
PROFESSIONAL ENGINEER N.J. LIC.
24GE04894200

IT IS A VIOLATION OF LAW FOR ANY PERSON, UNLESS THEY ARE ACTING UNDER THE DIRECTION OF A LICENSED PROFESSIONAL ENGINEER, ARCHITECT, LANDSCAPE ARCHITECT OR LAND SURVEYOR TO ALTER AN ITEM IN ANY WAY. IF AN ITEM BEARING THE STAMP OF A LICENSED PROFESSIONAL IS ALTERED, THE ALTERING ENGINEER, ARCHITECT, LANDSCAPE ARCHITECT OR LAND SURVEYOR SHALL STAMP THE DOCUMENT AND INCLUDE THE NOTATION "ALTERED BY" FOLLOWED BY THEIR SIGNATURE, THE DATE OF SUCH ALTERATION, AND A SPECIFIC DESCRIPTION OF THE ALTERATION.

PIONEERS

WILLIAM PATERSON UNIVERSITY

SOCCER FIELD IMPROVEMENTS

300 POMPTON RD.
WAYNE, NJ 07470

No.	Submittal / Revision	App'd.	By	Date
2	ADD. NO. 1	DD	EG	01/25/16
1	CONSTRUCTION DOCUMENTS			01/11/16

FIELD DRAINAGE PLAN

Designed By:	Drawn By:	Checked By:
WM	TM	DD
Issue Date:	Project No:	Scale:
01/11/2016	30059	AS SHOWN

Drawing No.:
C-204

File: V:\PROJECTS\ANY\K4\30059\CADD_ACAD\C204-30059.DWG
Saved: 1/13/2016 4:30:12 PM Plotted: 1/26/2016 7:38:32 AM Current User: Merkwin, Tim LastSaveBy: 3512

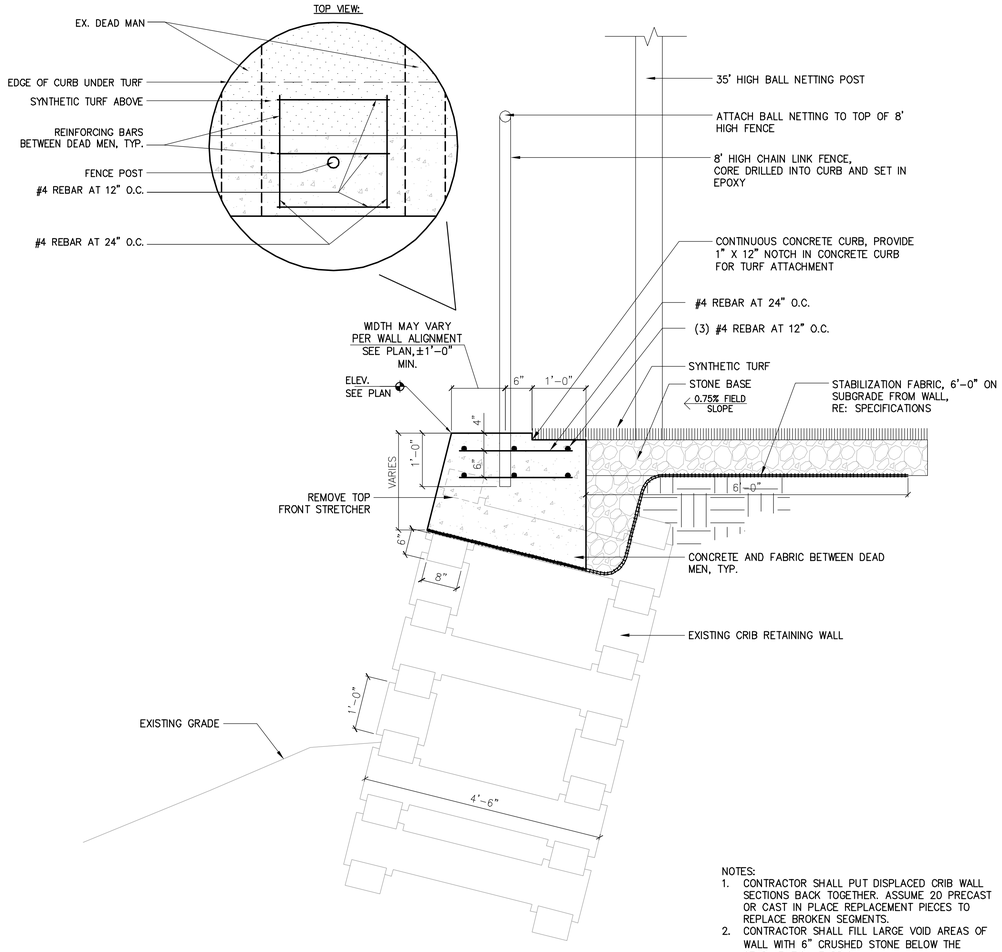

NOTES:
1. CONTRACTOR SHALL PUT DISPLACED CRIB WALL SECTIONS BACK TOGETHER. ASSUME 20 PRECAST OR CAST IN PLACE REPLACEMENT PIECES TO REPLACE BROKEN SEGMENTS.
2. CONTRACTOR SHALL FILL LARGE VOID AREAS OF WALL WITH 6" CRUSHED STONE BELOW THE STABILIZATION FABRIC.

2

3 CRIB WALL FIELD CURB SECTION AT EAST SIDE LINE

SECTION — SCALE: 3/4" = 1'-0"

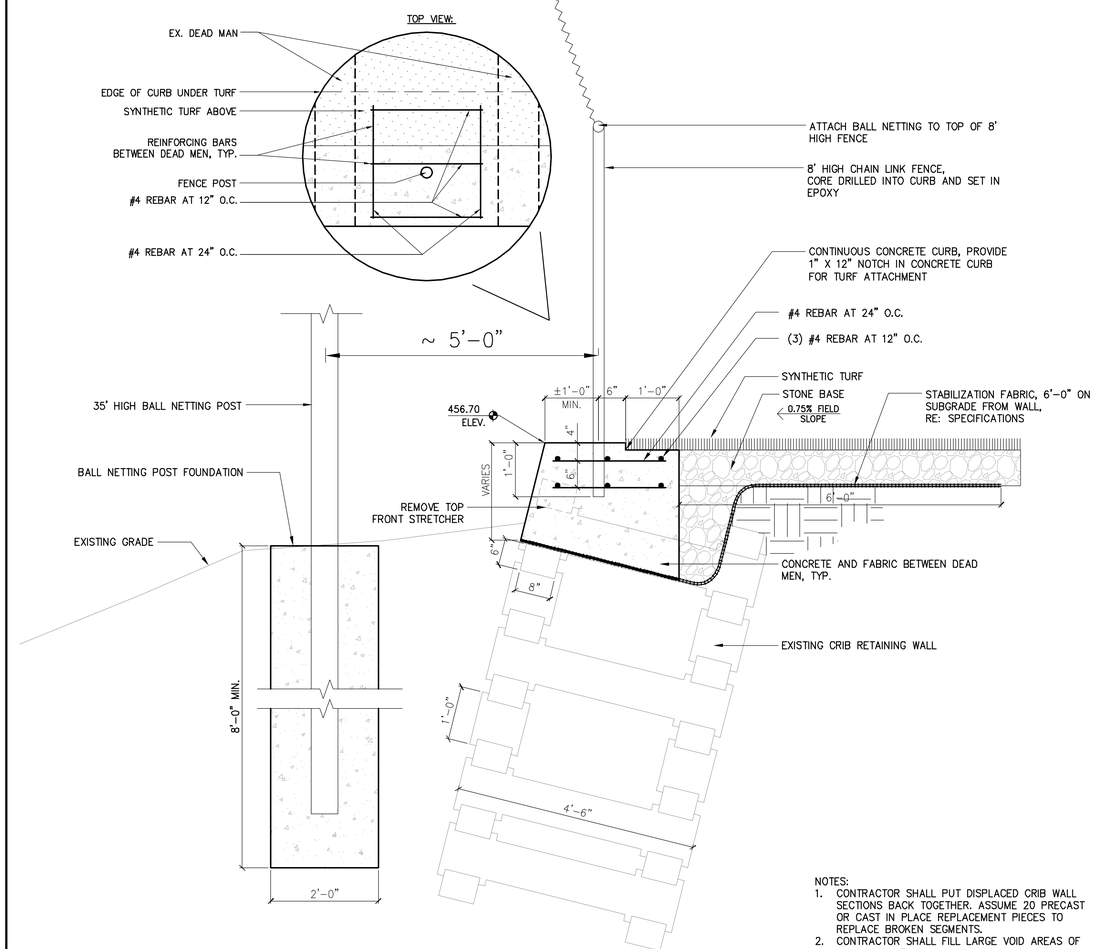

NOTES:
1. CONTRACTOR SHALL PUT DISPLACED CRIB WALL SECTIONS BACK TOGETHER. ASSUME 20 PRECAST OR CAST IN PLACE REPLACEMENT PIECES TO REPLACE BROKEN SEGMENTS.
2. CONTRACTOR SHALL FILL LARGE VOID AREAS OF WALL WITH 6" CRUSHED STONE BELOW THE STABILIZATION FABRIC.

2

2 CRIB WALL FIELD CURB SECTION AT NORTH AND SOUTH END LINES

SECTION — SCALE: 3/4" = 1'-0"

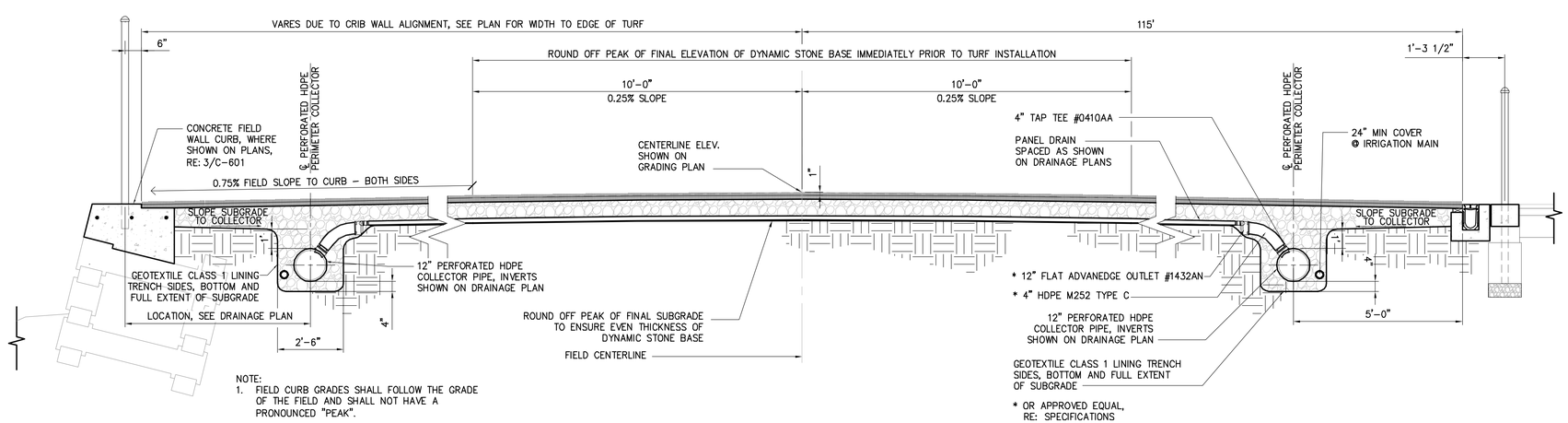

NOTE:
1. FIELD CURB GRADES SHALL FOLLOW THE GRADE OF THE FIELD AND SHALL NOT HAVE A PRONOUNCED "PEAK".

1 FIELD SECTION

SECTION — SCALE: 1/2" = 1'-0"

Drawing Copyright © 2015

CHA
6 Campus Drive
Parsippany, NJ 07054-4406
973.538.3100 - www.chacompanies.com

PETER L. LILHOLT, JR.
PROFESSIONAL ENGINEER N.J. LIC.
24GE04894200

IT IS A VIOLATION OF LAW FOR ANY PERSON, UNLESS THEY ARE ACTING UNDER THE DIRECTION OF A LICENSED PROFESSIONAL ENGINEER, ARCHITECT, LANDSCAPE ARCHITECT OR LAND SURVEYOR TO ALTER AN ITEM IN ANY WAY. IF AN ITEM BEARING THE STAMP OF A LICENSED PROFESSIONAL IS ALTERED, THE ALTERING ENGINEER, ARCHITECT, LANDSCAPE ARCHITECT OR LAND SURVEYOR SHALL STAMP THE DOCUMENT AND INCLUDE THE NOTATION "ALTERED BY" FOLLOWED BY THEIR SIGNATURE, THE DATE OF SUCH ALTERATION, AND A SPECIFIC DESCRIPTION OF THE ALTERATION.

PIONEERS

WILLIAM PATERSON UNIVERSITY

SOCCER FIELD IMPROVEMENTS

300 POMPTON RD.
WAYNE, NJ 07470

No.	Submittal / Revision	App'd.	By	Date
2	ADD. NO. 1	DD	TM	01/25/16
1	CONSTRUCTION DOCUMENTS	DD	TM	01/11/16

SITE DETAILS

Designed By:	Drawn By:	Checked By:
WM	TM	DD
Issue Date: 01/11/2016	Project No: 30059	Scale: AS SHOWN

Drawing No.:
C-601

File: V:\PROJECTS\ANY\X4\30059\CADD_ACAD\C601-C606-30059.DWG
Saved: 1/25/2016 4:48:10 PM Plotted: 1/25/2016 4:49:28 PM Current User: Merkelin, Tim LastSavedBy: 3512

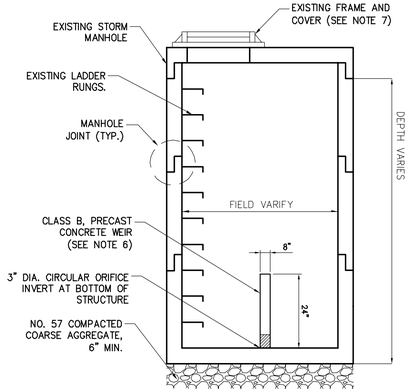

NOTES:

1. CONTRACTOR TO SUPPLY SHOP DRAWINGS FOR EACH OUTLET CONTROL IN EXISTING STORM MANHOLES #2 AND #3.
2. CONTRACTOR TO REMOVE DEBRIS FROM MANHOLE PRIOR TO INSTALLATION OF WEIR.
3. CONTRACTOR TO VERIFY THE INTEGRITY OF THE EXISTING STRUCTURE PRIOR TO THE EXCAVATION OR INSTALLATION. ANY CONCERN SHALL BE BROUGHT TO THE ENGINEER'S ATTENTION PRIOR TO INSTALLATION OR EXCAVATION.
4. INSTALL OUTLET CONTROL WEIR AND ORIFICE OPENING AT EXISTING STORM MANHOLE #2 AND #3. FIELD VERIFY EXISTING MANHOLE DEPTHS, DIMENSIONS AND INVERTS PRIOR TO INSTALLATION.
5. SEE DRAINAGE PLANS FOR INVERTS AND DIAMETERS AT CONNECTING PIPES LOCATIONS.
6. EXTEND AND SECURE WEIR WITH NON-SHRINK GROUT CONFORMING TO ASTM C1107, GRADE C, TO MANHOLE WALLS.
7. CASTING OF PRECAST MANHOLES SHALL BE ADJUSTED TO GRADE WITH COURSES OF BRICK OR CONCRETE BLOCK, AS REQUIRED, 12 INCHES MAXIMUM.

2

9 OUTLET CONTROL (EX. MH#2 AND MH#3)

SECTION — SCALE: N.T.S.

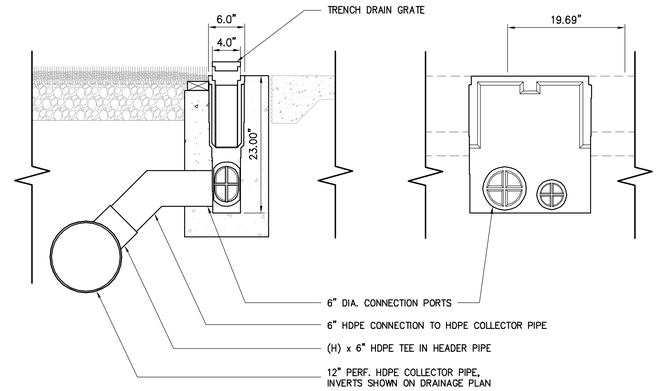

6 CHANNEL DRAIN CATCH BASIN

SECTION — SCALE: 1" = 1'-0"

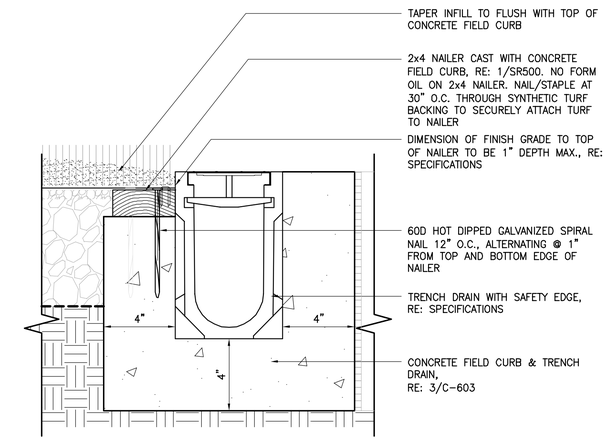

3 SYNTHETIC TURF NAILER ATTACHMENT AT CHANNEL DRAIN

SECTION — SCALE: 3" = 1'-0"

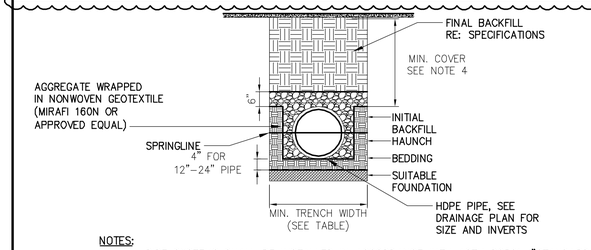

MINIMUM TRENCH WIDTHS

PIPE DIAM.	MIN. TRENCH WIDTH
4"	21"
6"	23"
12"	30"

NOTES:

1. ALL PIPE SYSTEMS SHALL BE INSTALLED IN ACCORDANCE WITH ASTM D2321, "STANDARD PRACTICE FOR UNDERGROUND INSTALLATION OF THERMOPLASTIC PIPE FOR SEWERS AND OTHER GRAVITY FLOW APPLICATIONS", LATEST ADDITION.
2. BEDDING: SUITABLE MATERIAL SHALL BE CLASS I, II OR III. THE CONTRACTOR SHALL PROVIDE DOCUMENTATION FOR MATERIAL SPECIFICATION TO ENGINEER. UNLESS OTHERWISE NOTED BY THE ENGINEER, MINIMUM BEDDING THICKNESS SHALL BE 4" FOR 4"-24".
3. INITIAL BACKFILL: SUITABLE MATERIAL SHALL BE CLASS I, II OR III IN THE PIPE ZONE EXTENDING NOT LESS THAN 6" ABOVE CROWN OF PIPE. THE CONTRACTOR SHALL PROVIDE DOCUMENTATION FOR MATERIAL SPECIFICATION TO ENGINEER. MATERIAL SHALL BE INSTALLED AS REQUIRED IN ASTM D2321, LATEST EDITION.
4. MINIMUM COVER: MINIMUM COVER, H, IN NON-TRAFFIC APPLICATIONS (GRASS OR LANDSCAPE AREAS) IS 12" FROM THE TOP OF PIPE TO GROUND SURFACE. ADDITIONAL COVER MAY BE REQUIRED TO PREVENT FLOATATION.
5. PERFORATED HDPE SHALL BE WRAPPED WITH FACTORY INSTALLED NONWOVEN GEOTEXTILE OR FILTER SOCK.

8 HDPE DRAINAGE TRENCH

SECTION — SCALE: N.T.S.

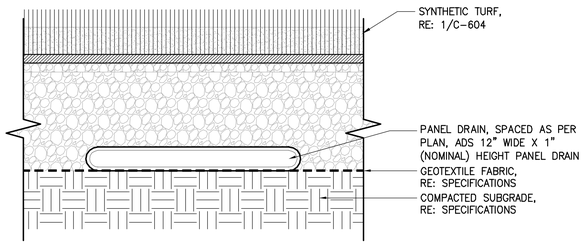

5 PANEL DRAIN

SECTION — SCALE: 3" = 1'-0"

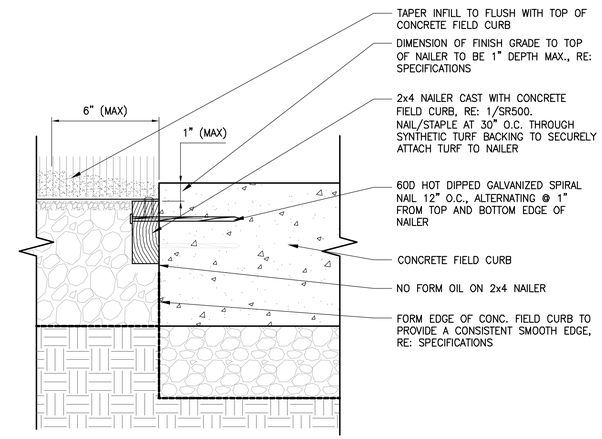

2 SYNTHETIC TURF NAILER ATTACHMENT

SECTION — SCALE: 3" = 1'-0"

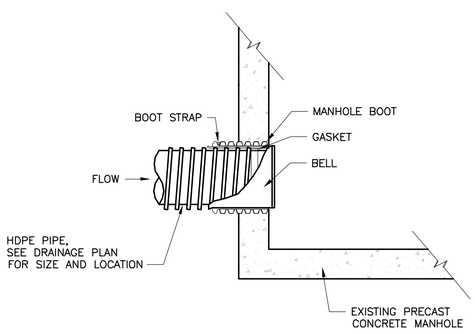

7 HDPE CONNECTION AT EXISTING STORM MANHOLE

SECTION — SCALE: N.T.S.

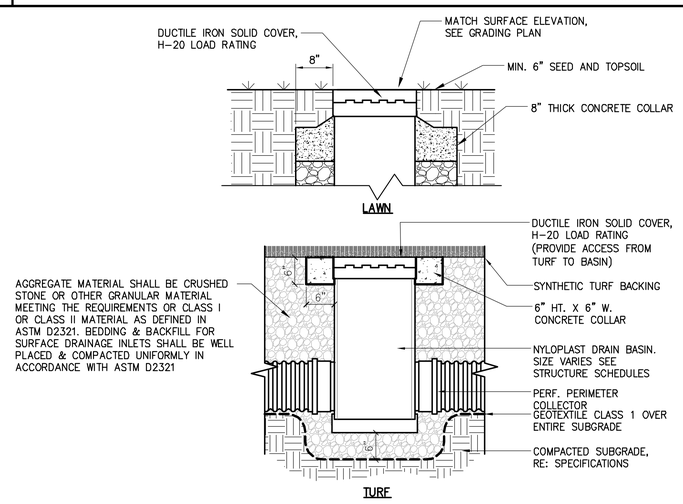

4 DRAIN BASIN CLEANOUT

SECTION — SCALE: 3/4" = 1'-0"

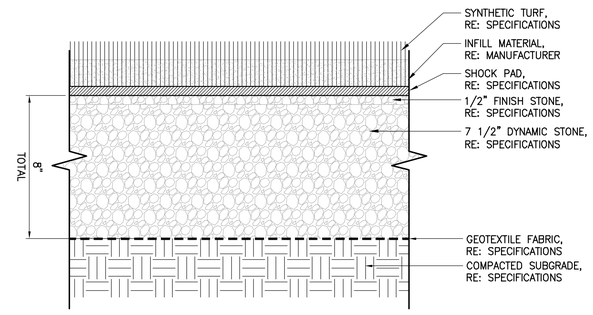

1 SYNTHETIC TURF

SECTION — SCALE: 3" = 1'-0"

Drawing Copyright © 2015

CHA
6 Campus Drive
Parsippany, NJ 07054-4406
973.538.3100 - www.chacompanies.com

PETER L. LILHOLT, JR.
PROFESSIONAL ENGINEER N.J. LIC.
24GE04894200

IT IS A VIOLATION OF LAW FOR ANY PERSON, UNLESS THEY ARE ACTING UNDER THE DIRECTION OF A LICENSED PROFESSIONAL ENGINEER, ARCHITECT, LANDSCAPE ARCHITECT OR LAND SURVEYOR, TO ALTER AN ITEM IN ANY WAY. IF AN ITEM BEARING THE STAMP OF A LICENSED PROFESSIONAL IS ALTERED, THE ALTERING ENGINEER, ARCHITECT, LANDSCAPE ARCHITECT OR LAND SURVEYOR SHALL STAMP THE DOCUMENT AND INCLUDE THE NOTATION "ALTERED BY" FOLLOWED BY THEIR SIGNATURE, THE DATE OF SUCH ALTERATION, AND A SPECIFIC DESCRIPTION OF THE ALTERATION.

PIONEERS

WILLIAM PATERSON UNIVERSITY

SOCCER FIELD IMPROVEMENTS

300 POMPTON RD.
WAYNE, NJ 07470

No.	Submittal / Revision	App'd.	By	Date
2	ADD. NO. 1	DD	EG	01/25/16
1	CONSTRUCTION DOCUMENTS	DD	TM	01/11/16

SITE DETAILS

Designed By:	Drawn By:	Checked By:
WM	TM	DD
Issue Date: 01/11/2016	Project No: 30059	Scale: AS SHOWN

Drawing No.:
C-604

File: V:\PROJECTS\ANY\X4\30059\C400_ACAD\C601-C606-30059.DWG
Saved: 1/21/2016 10:34:47 AM Plotted: 1/25/2016 11:53:47 PM Current User: Merkelin, Tim LastSavedBy: 3512

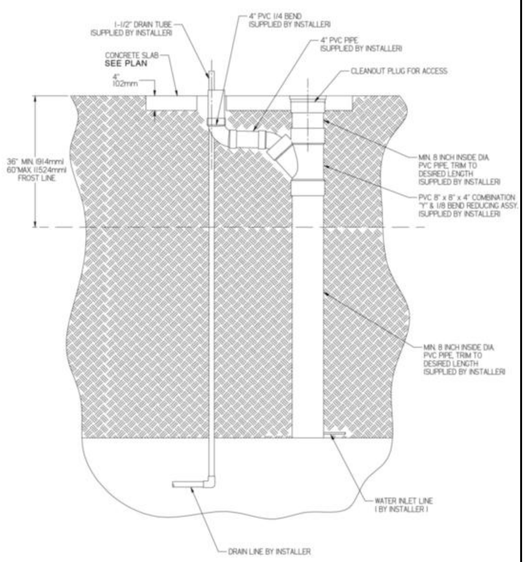

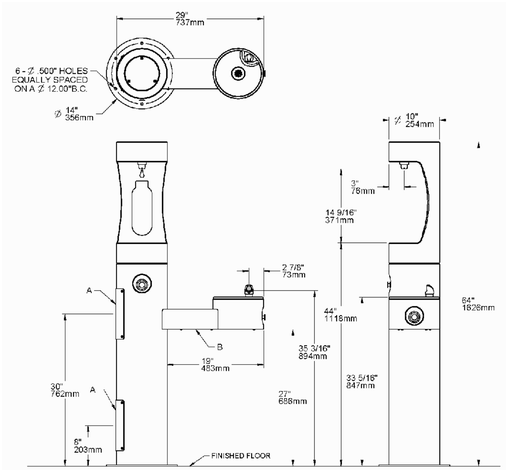

LEGEND
A = ACCESS PANEL (8" X 10")
B = REMOVABLE BOTTOM COVER

SITE PREPARATION DETAIL
FIG. 4

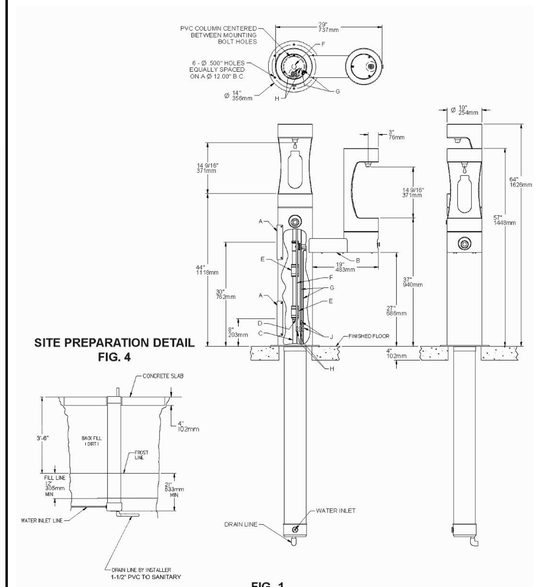

FIG. 1

LEGEND
A = ACCESS PANEL (8" X 10")
B = REMOVABLE BOTTOM COVER
C = 1" PVC DRAIN
D = PRESSURE FITTING 1-1/4" x 3/4"
E = CONNECTOR 1-1/4" TO 1-1/4"
F = 1-1/4" DRAIN TUBE
G = AIR CONTROL LINE
H = 1/4" WATER LINE
J = CONNECTOR FOR AIR CONTROL LINE

6 DRINKING FOUNTAIN DETAILS – ELKAY MODEL 4420BF1UFR

SECTION — SCALE: N.T.S.

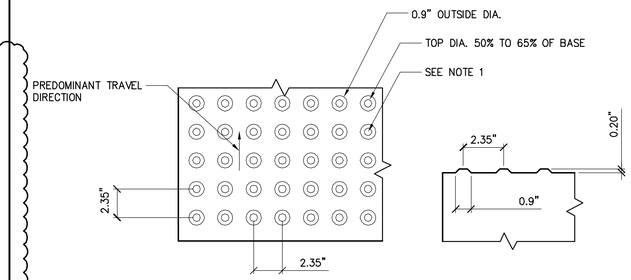

PARTIAL PLAN — PARTIAL SECTION

NOTES:

1. THE TRUNCATED DOME SURFACE SHALL CONTRAST VISUALLY WITH ADJOINING WALKING SURFACES EITHER LIGHT-ON-DARK OR DARK-ON-LIGHT. THE MATERIAL USED TO PROVIDE CONTRAST SHALL BE AN INTEGRAL PART OF THE TRUNCATED DOME SURFACE.
2. THE DETECTABLE WARNINGS SHALL EXTEND THE FULL WIDTH OF THE CURB RAMP OR FLUSH SURFACE.
3. DOMES SHALL BE ALIGNED ON A SQUARE GRID IN THE PREDOMINANT DIRECTION OF TRAVEL.

3 DETECTABLE WARNING FIELD

PLAN / SECTION — SCALE: N.T.S.

NOTES:

1. TRANSITION AND FLUSH SECTIONS SHALL BE CUT STRAIGHT OR TO THE PROPER RADIUS AS DESIGNATED ON PLANS.
2. FLUSH CURB SECTIONS ARE 6'-0" LENGTH TYPICAL EXCEPT WHERE NOTED OTHERWISE ON PLANS. FLUSH CURB SECTIONS ARE TO MEET LEVEL WITH ASPHALT PAVEMENT SURFACES WITH NO REVEAL.
3. PROVIDE HEAVY BROOM FINISH ON ALL CONCRETE RAMP SURFACES WITH THE EXCEPTION OF THE DETECTABLE WARNING AREA.
4. LENGTH OF RAMP SHALL BE AS REQUIRED TO MAINTAIN A 1:12 SLOPE.
5. DETECTABLE WARNING SURFACE TO COVER THE FIRST 24" OF RAMP SURFACE FOR FULL WIDTH OF RAMP.

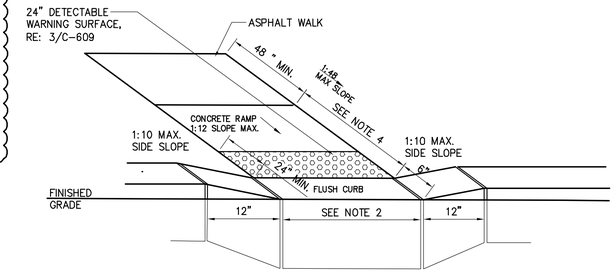

2 SIDEWALK CURB RAMP

ISOMETRIC — SCALE: N.T.S.

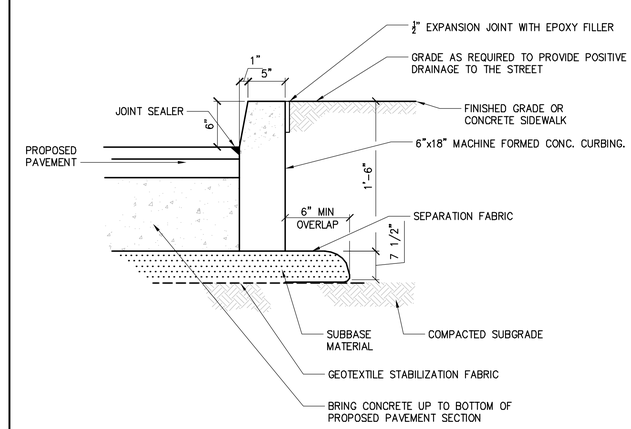

1 CONCRETE CURB

SECTION — SCALE: N.T.S.

5 NOT USED

SCALE: N.T.S.

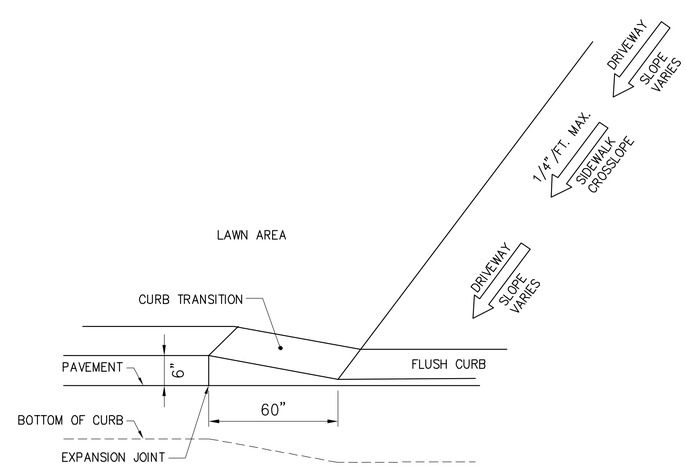

4 DRIVEWAY CURB

ISOMETRIC — SCALE: 1" = 1'-0"

Drawing Copyright © 2015

CHA
6 Campus Drive
Parsippany, NJ 07054-4406
973.539.3100 - www.chacompanies.com

PETER L. LILHOLT, JR.
PROFESSIONAL ENGINEER N.J. LIC.
24GE04894200

IT IS A VIOLATION OF LAW FOR ANY PERSON, UNLESS THEY ARE ACTING UNDER THE DIRECTION OF A LICENSED PROFESSIONAL ENGINEER, ARCHITECT, LANDSCAPE ARCHITECT OR LAND SURVEYOR TO ALTER AN ITEM IN ANY WAY. IF AN ITEM BEARING THE STAMP OF A LICENSED PROFESSIONAL ENGINEER, ARCHITECT, LANDSCAPE ARCHITECT OR LAND SURVEYOR SHALL STAMP THE DOCUMENT AND INCLUDE THE NOTATION "ALTERED BY" FOLLOWED BY THEIR SIGNATURE, THE DATE OF SUCH ALTERATION, AND A SPECIFIC DESCRIPTION OF THE ALTERATION.

PIONEERS

WILLIAM PATERSON UNIVERSITY

SOCCER FIELD IMPROVEMENTS

300 POMPTON RD.
WAYNE, NJ 07470

No.	Submittal / Revision	App'd.	By	Date
2	ADD. NO. 1	DD	TM	01/25/16
1	CONSTRUCTION DOCUMENTS	DD	TM	01/11/16

SITE DETAILS

Designed By:	Drawn By:	Checked By:
WM	TM	DD
Issue Date: 01/11/2016	Project No: 30059	Scale: AS SHOWN

Drawing No.:
C-609

File: V:\PROJECTS\ANY\K4\30059\CADD_ACAD\C601-C606-30059.DWG
Saved: 1/25/2016 4:51:09 PM Plotted: 1/27/2016 7:21:51 AM Current User: Merkein, Tim LastSavedBy: 3512

ABBREVIATIONS

A	AMPERE
AC	ALTERNATING CURRENT
AF	AMPERE FRAME
AFF/G	ABOVE FINISHED FLOOR/GRADE
AIC	AMPERE INTERRUPTING CAPACITY
AT	AMPERE TRIP
AUX	AUXILIARY
A/V	AUDIBLE/VISUAL
AWG	AMERICAN WIRE GAUGE
BB	BACKBOARD
BCW	BARE COPPER WIRE
BATT	BATTERY
BTM	BOTTOM
BKR	BREAKER
BLDG	BUILDING
C	CONDUIT
CAB	CABINET
CATV	COMMUNITY ACCESS TELEVISION (CABLE TELEVISION)
CB	CIRCUIT BREAKER
CIR	CIRCUIT
CKT	CIRCUIT
℄	CENTER LINE
CO	COMPANY
COMM	COMMUNICATIONS
CONN	CONNECTION, CONNECT
CUH	CABINET UNIT HEATER
CT	CURRENT TRANSFORMER
CU	COPPER
CWA	CONSTANT WATTAGE AUTOTRANSFORMER
△	DELTA CONNECTION
D	DEEP
DB	DECIBEL
DET	DETECTOR
DIA	DIAMETER
DISC	DISCONNECT
DIST	DISTRIBUTION
DIV	DIVISION
DN	DOWN
DWG	DRAWING
EA	EACH
EBH	ELECTRIC BASEBOARD HEATER
EF	EXHAUST FAN
EL	ELEVATION
ELEC	ELECTRIC(AL)
EMER	EMERGENCY
ENCL	ENCLOSURE
EQUIP	EQUIPMENT
ETR	EXISTING TO REMAIN 2
EWC	ELECTRIC WATER COOLER
EXT	EXTERIOR
F	FUSE(D)
FA	FIRE ALARM
FACP	FIRE ALARM CONTROL PANEL
FC	FOOTCANDLES
FIXT	FIXTURE
FLR	FLOOR
FLUOR	FLUORESCENT
FT	FOOT (FEET)
FUT	FUTURE
G, GND	GROUND
GALV	GALVANIZE(D)
GC	GENERAL CONTRACTOR
GFI	GROUND FAULT CIRCUIT INTERRUPTER
GFP	GROUND FAULT PROTECTION
HD	HEAVY DUTY
HGT	HEIGHT
HID	HIGH INTENSITY DISCHARGE
HO	HIGH OUTPUT
HOA	HAND-OFF-AUTOMATIC
HP	HORSEPOWER
HPF	HIGH POWER FACTOR
HPS	HIGH PRESSURE SODIUM
HTR	HEATER
HV	HIGH VOLTAGE
HW	HOT WATER
ID	IDENTIFY, IDENTIFICATION
INCAND	INCANDESCENT
J-BOX	JUNCTION BOX
J.C.	JANITOR CLOSET
JCT	JUNCTION
KCM/Kcmil	THOUSAND CIRCULAR MILS
KVA	KILO VOLT AMPERE
KW	KILOWATT
LGT	LIGHTING
LT(S)	LIGHT(S)
LED	LIGHT EMITTING DIODE
L	LOUVER
MAX	MAXIMUM
MCB	MAIN CIRCUIT BREAKER
MC	METAL CLAD CABLE
MFR	MANUFACTURER
MH	METAL HALIDE
MECH	MECHANICAL
MIN	MINIMUM
ML	MOTORIZED LOUVER
MLO	MAIN LUGS ONLY
MT	MOUNT
MTD	MOUNTED
MTR	MOTOR
N	NORTH
NEC	NATIONAL ELECTRICAL CODE
NF	NON-FUSED
NL	NIGHT LIGHT
No/#	NUMBER
OC	OVER COUNTER
OL	OVERLOAD
P	POLE(S)
PA	PUBLIC ADDRESS
PNL	PANEL
PR	PAIR
PRI	PRIMARY
PWR	POWER
Ø	PHASE
PT	PRESSURE TREATED
RECEPT	RECEPTACLE
RGS	RIGID GALVANIZED STEEL
RM	ROOM
SEC	SECONDARY
SH	SHIELDED
SPKR	SPEAKER
SW	SWITCH
TEMP	TEMPORARY/TEMPERATURE
T-STAT	THERMOSTAT
TB	TERMINAL BOARD
TYP	TYPICAL
UH	UNIT HEATER
UON	UNLESS OTHERWISE NOTED
V	VOLT, VOLTS
VA	VOLT-AMPERES
W	WATT, WIRE
W/	WITH
WP	WEATHERPROOF
XFMR/T	TRANSFORMER
Y	WYE CONNECTION

LIGHTING

REFER TO LIGHTING FIXTURE SCHEDULE FOR TYPE, LAMP, BALLAST, POWER REQUIREMENTS, MOUNTING HEIGHT AND MANUFACTURER.

- SITE LIGHT
- PC — PHOTOCELL 2
- TM — TIMER 2
- P — PHOTOCELL 2
- LIGHTING CONTACTOR 2

RACEWAYS

- CONDUIT CONCEALED OR EXPOSED AS SPECIFIED
- CONDUIT TURNING UP
- CONDUIT TURNING DOWN
- PP-1 1/3/5 — HOMERUN BACK TO PANEL (PANEL AND CIRCUITS INDICATED)
- CIRCUIT CONTINUED OR CONNECTED TO EQUIPMENT AS INDICATED
- UNDERGROUND CONDUIT
- GROUND CONDUCTOR
- GROUNDING CONDUCTOR TERMINATION POINT AT SERVICE EQUIPMENT
- INDICATES EXISTING DEVICES OR EQUIPMENT

DEVICES AND APPURTENANCES

- $M — SINGLE POLE TOGGLE SWITCH
- LP1-23 WP — DUPLEX RECEPTACLE
  WP=WEATHERPROOF
  LP1-23=DENOTES PANEL AND CORRESPONDING CIRCUIT
  GFCI=GROUND FAULT CIRCUIT INTERRUPTER
- TWO – 20 AMP DUPLEX RECEPTACLES UNDER SINGLE COVER
- HARDWARE EQUIPMENT CONNECTION
- GROUND ROD 5/8" X 10'-0" COPPER CLAD
- JB — JUNCTION BOX 2
- HH — HANDHOLE 2

ONE LINE DIAGRAMS

- POWER TRANSFORMER
- AMPS FRAME 400AF, AMPS TRIP 400AT, NR. of POLES 3P — GFP — MOLDED CASE CIRCUIT BREAKER W/GROUND FAULT PROTECTION
- SAFETY DISCONNECT SWITCH – UNFUSED
- CONNECTED CONDUCTORS
- CROSSING OF CONDUCTORS NOT CONNECTED
- NORMALLY OPEN CONTACT/RELAY
- NORMALLY CLOSED CONTACT/RELAY
- CURRENT TRANSFORMER
- FUSE
- TR — TIME RELAY
- 1 — CIRCUIT TAG REFER TO CONDUIT AND CONDUCTOR SCHEDULE
- GROUNDING CONNECTION
- FUSED DISCONNECT SWITCH AND/OR BOLT PRESSURE SWITCH
- METER — METER ASSEMBLY
- POTENTIAL TRANSFORMER
- 3 — MOTOR
- INDICATES EQUIPMENT ENCLOSURE
- AMPS FRAME 100A, NR. of POLES 2P — MCB — PP — MOLDED CASE CIRCUIT BREAKER
  MCB= MAIN CIRCUIT BREAKER
  PP= PANEL 2

POWER DISTRIBUTION EQUIPMENT

- SURFACE MOUNTED BRANCH CIRCUIT PANELBOARD 208/120V, 3ø, 4W, UON
- 600/5 — SURFACE MOUNTED BRANCH CIRCUIT PANELBOARD 480/277V, 3ø, 4W, UON
- DISTRIBUTION PANEL
- CP — CONTROL PANEL 2
- 30/3 — NON-FUSED SAFETY SWITCH DISCONNECT RATING/POLES
- 30/3/15 — FUSIBLE SAFETY SWITCH DISCONNECT RATING/POLES/FUSE RATING
- TRANSFORMER 2
- 1 — T — X — EF-1 — ELECTRIC MOTOR (DESIGNATION INDICATED) NUMBER INDICATES HORSEPOWER

GENERAL

- # — NUMBER IN CIRCLE, WITH OR WITHOUT ARROW OR LEADER, REFER TO MATCHING NUMBERED CODED NOTE
- # — NUMBER IN DIAMOND, WITH OR WITHOUT ARROW OR LEADER; REFER TO THE DEMOLITION CODED NOTE WITH THE MATCHING NUMBER
- X / XXX — DETAIL CALLOUT

GENERAL NOTES

1. REFER TO CIVIL, STRUCTURAL, ARCHITECTURAL, MECHANICAL, PLUMBING, AND FOOD SERVICE DRAWINGS FOR SYMBOLS ASSOCIATED WITH WORK, EQUIPMENT, ETC. BY OTHER(S).
2. ALL WORK SHOWN ON THE ELECTRICAL DRAWINGS SHALL BE BY THE ELECTRICAL CONTRACT UNLESS OTHERWISE INDICATED.
3. COORDINATE WORK WITH ALL TRADES. MECHANICAL
4. CONDUIT RUNS SHOWN ARE DIAGRAMMATIC UON. EXACT LOCATION OF ALL CONDUIT RUNS SHALL BE DETERMINED IN THE FIELD. COORDINATE INSTALLATIONS AND AVOID CONFLICT WITH PIPING, DUCTWORK, ACCESS DOORS AND WORK BY OTHER TRADES.
5. GENERAL NOTES APPLY TO ALL ELECTRICAL CONTRACT DRAWINGS.

Drawing Copyright © 2015

CHA
6 Campus Drive
Parsippany, NJ 07054-4406
973.538.2120 · www.chacompanies.com

IT IS A VIOLATION OF LAW FOR ANY PERSON, UNLESS THEY ARE ACTING UNDER THE DIRECTION OF A PROFESSIONAL ENGINEER, ARCHITECT, LANDSCAPE ARCHITECT OR LAND SURVEYOR TO ALTER AN ITEM IN ANY WAY. IF AN ITEM BEARING THE STAMP OF A LICENSED PROFESSIONAL IS ALTERED, THE ALTERING ENGINEER, ARCHITECT, LANDSCAPE ARCHITECT OR LAND SURVEYOR SHALL STAMP THE DOCUMENT AND INCLUDE THE NOTATION "ALTERED BY" FOLLOWED BY THEIR SIGNATURE, THE DATE OF SUCH ALTERATION, AND A SPECIFIC DESCRIPTION OF THE ALTERATION.

PIONEERS

WILLIAM PATERSON UNIVERSITY

SOCCER FIELD IMPROVEMENTS

300 POMPTON RD.
WAYNE, NJ 07470

No.	Submittal / Revision	App'd.	By	Date
2	ADD. NO. 1	SR	LH	XX/XX/XX
1	CONSTRUCTION DOCUMENTS	SR	LH	01/11/16

ELECTRICAL LEGEND, ABBREVIATIONS AND SYMBOLS

Designed By:	Drawn By:	Checked By:
SR	LH	JD
Issue Date: 01/11/2016	Project No: 30059	Scale: AS SHOWN

Drawing No.:

E-001

File: V:\PROJECTS\ANY\K4\30059\CADD_ACAD\E-001-30059.DWG
Saved: 1/25/2016 2:36:10 PM Plotted: 1/26/2016 9:15:01 AM Current User: Havens, Leslie LastSavedBy: 3840

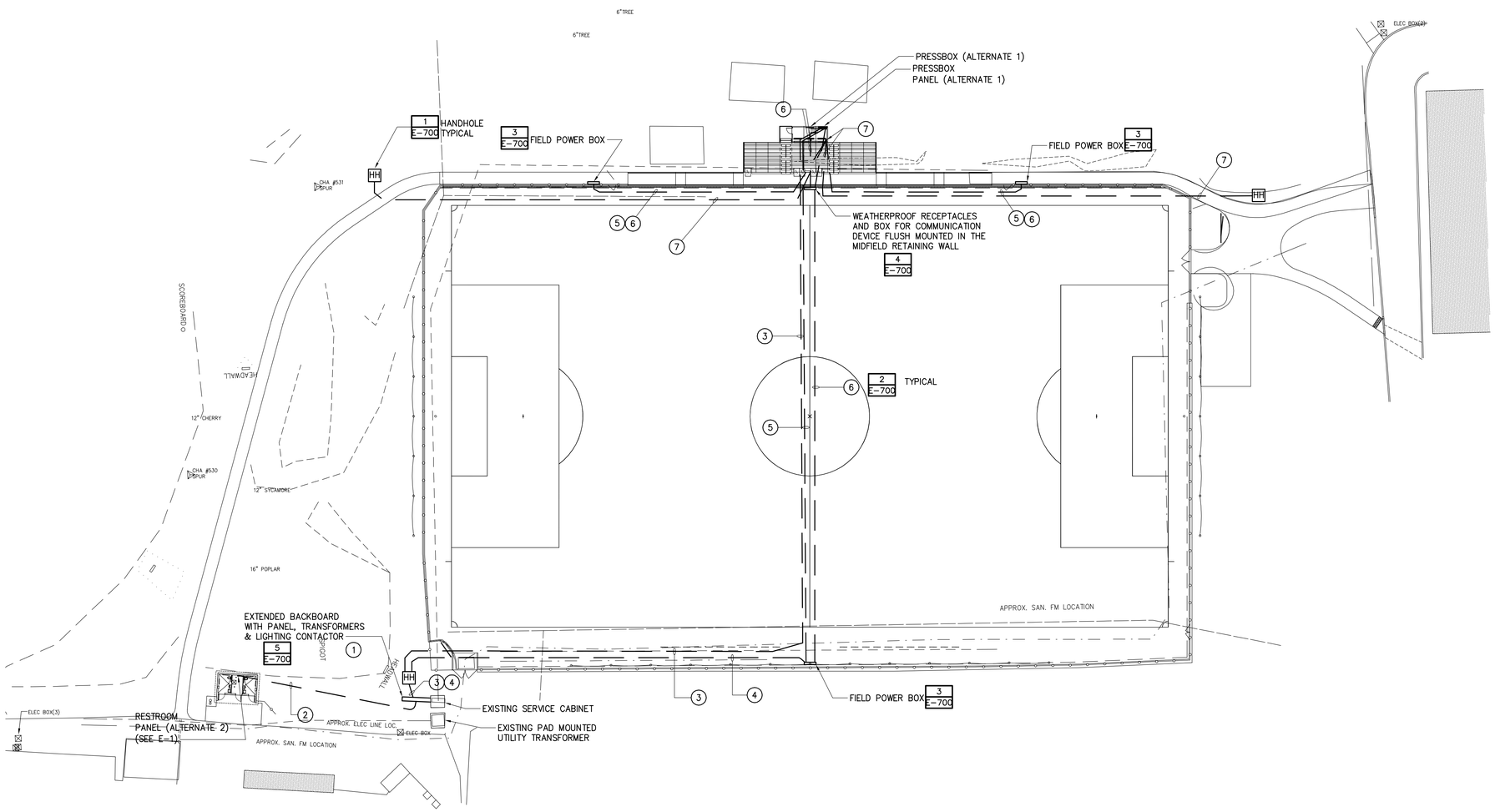

2 ELECTRICAL SITE POWER PLAN

1" = 30'-0"

2

CODED NOTES

1. BASE BID: EXTEND EXISTING CONCRETE PAD AND BACKBOARD, AND PROVIDE 480V 3PH 150A MCB POWER PANEL PP IN NEMA 3R ENCLOSURE AND TRANSFORMERS AS PER ONE-LINE DIAGRAM ON DWG. E-600, LIGHTING CONTACTOR WITH TIMER, PHOTOCELL AND H-O-A SELECTOR SWITCH. PROVIDE 2-1/2"C, (3)#3/0, (1)#6G FROM PP PANEL AND TAP TO SECONDARY SERVICE FEED IN THE EXISTING PULL BOX. CURRENT DESIGN IS BASED ON ASSUMPTION. CLIENT TO CONFIRM INFORMATION PRIOR TO PROJECT BEING ISSUED FOR CONSTRUCTION.
2. BASE BID: PROVIDE UNDERGROUND 1-1/2" PVC SCH 40 AND STUB UP AT THE EXTENDED BACKBOARD AND LVP-1 PANEL LOCATION.
   ALTERNATE 2: PROVDE 25KVA 480V-208/120V 1PH 3W TRANSFORMER AND PULL IN (3)#2 AND (1)#6G IN UNDERGROUND CONDUIT FOR RESTROOM 100A LVP-1 PANEL.
3. BASE BID: PROVIDE UNDERGROUND 1-1/2" PVC SCH 40 AND STUB UP AT THE EXTENDED BACKBOARD AND PRESS BOX LOCATION.
   ALTERNATE 1: PROVDE 25KVA 480V-208/120V 1PH 3W TRANSFORMER AND PULL (3)#2 AND (1)#6G IN UNDERGROUND CONDUIT EXTENDED TO PRESS BOX 100A PANEL.
4. BASE BID: PROVIDE UNDERGROUND 2" CONDUIT WITH PULL WIRE FOR FUTURE CIRCUITS AND STUB UP AT THE BACKBOARD LOCATION.
5. BASE BID: PROVIDE UNDERGROUND 1" PVC SCH 40 AND STUB UP AT THE PRESS BOX LOCATION AND FIELD POWER BOX.
   ALTERNATE 1: PROVIDE (2)#8 AND (1)#8G IN UNDERGROUND CONDUIT FROM FIELD POWER BOX WITH TWO DUPLEX WEATHERPROOF GFCI RECEPTACLES TO PRESS BOX 100A PANEL.
6. BASE BID: PROVIDE UNDERGROUND 2" CONDUIT WITH PULL WIRE FOR FUTURE COMMUNICATION WIRING AND STUB UP AT THE PRESS BOX LOCATION.
   ALTERNATE 1: EXTEND 2" CONDUIT AND STUB UP IN PRESS BOX IT ROOM.
7. BASE BID: PROVIDE UNDERGROUND TWO 2" CONDUITS WITH PULL WIRE TO HAND HOLE FOR FUTURE COMMUNICATION WIRING AND STUB UP AT THE PRESS BOX LOCATION.
   ALTERNATE 1: EXTEND TWO 2" CONDUITS AND STUB UP IN PRESS BOX IT ROOM.

0 30' 60'
Scale in feet

Drawing Copyright © 2015

CHA
6 Campus Drive
Parsippany, NJ 07054-4406
973.538.2120 · www.chacompanies.com

IT IS A VIOLATION OF LAW FOR ANY PERSON, UNLESS THEY ARE ACTING UNDER THE DIRECTION OF A LICENSED PROFESSIONAL ENGINEER, ARCHITECT, LANDSCAPE ARCHITECT OR LAND SURVEYOR TO ALTER AN ITEM IN ANY WAY. IF AN ITEM BEARING THE STAMP OF A LICENSED PROFESSIONAL IS ALTERED, THE ALTERING ENGINEER, ARCHITECT, LANDSCAPE ARCHITECT OR LAND SURVEYOR SHALL STAMP THE DOCUMENT AND INCLUDE THE NOTATION "ALTERED BY" FOLLOWED BY THEIR SIGNATURE, THE DATE OF SUCH ALTERATION, AND A SPECIFIC DESCRIPTION OF THE ALTERATION.

PIONEERS

WILLIAM PATERSON UNIVERSITY

SOCCER FIELD IMPROVEMENTS

300 POMPTON RD.
WAYNE, NJ 07470

No.	Submittal / Revision	App'd.	By	Date
2	ADD. NO. 1	SR	LH	XX/XX/XX
1	CONSTRUCTION DOCUMENTS	SR	LH	01/11/16

ELECTRICAL SITE POWER PLAN

Designed By:	Drawn By:	Checked By:
SR	LH	JD
Issue Date:	Project No:	Scale:
01/11/2016	30059	AS SHOWN

Drawing No.:
E-100

File: V:\PROJECTS\ANY\K4\30059\CADD_ACAD\E-100-30059.DWG
Saved: 1/25/2016 4:06:14 PM Plotted 1/25/2016 9:17:15 AM Current User: Havens, Leslie LastSavedBy: 3840

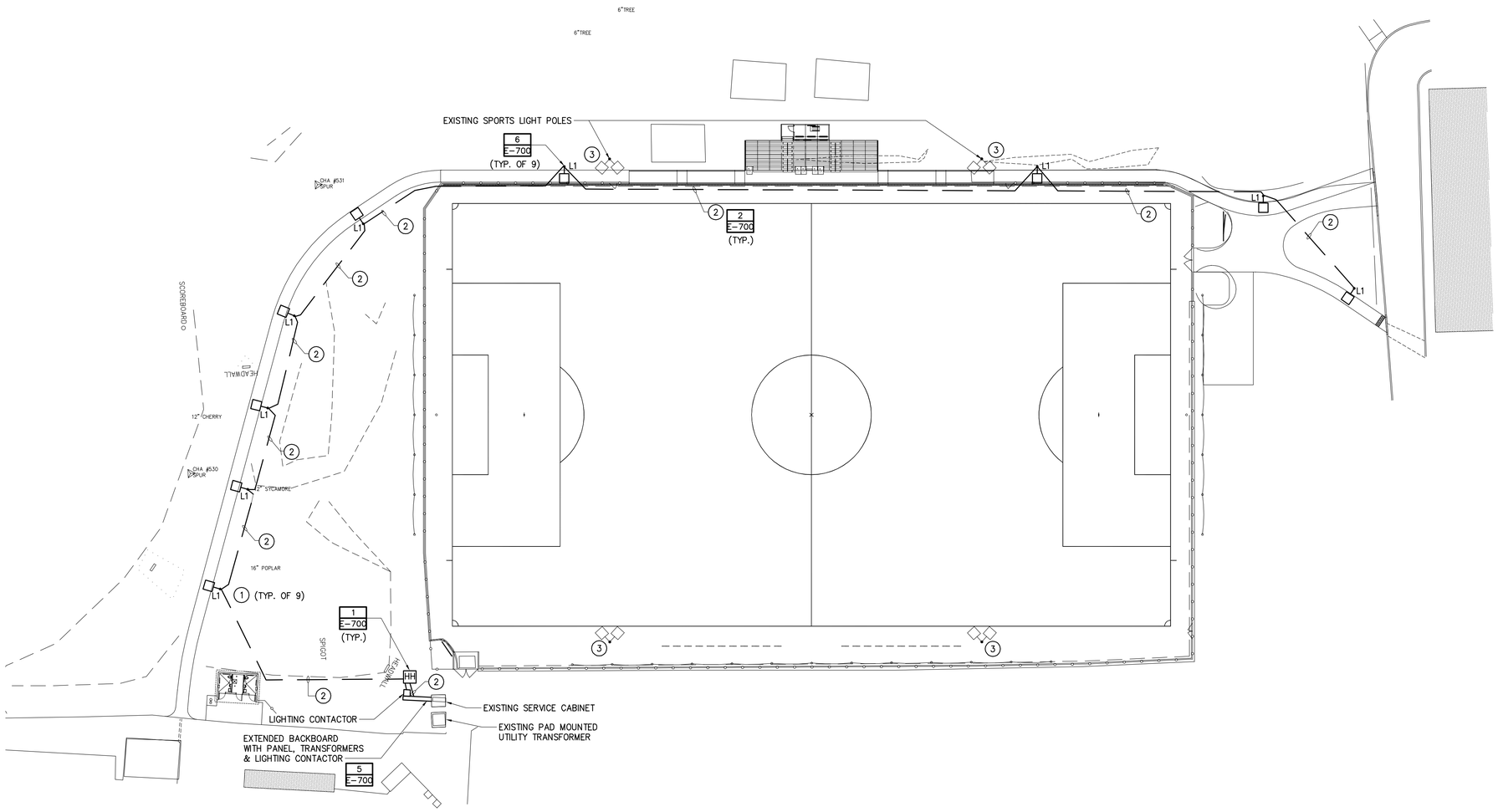

2 ELECTRICAL SITE LIGHTING PLAN

1" = 30'-0"

2

CODED NOTES

1. ALTERNATE 3: PROVIDE LIGHT POLES WITH TYPE L1 KIM LIGHTING LED LUMINAIRES TO MATCH CAMPUS WIDE LIGHT POLES. REFER TO LUMINAIRE DATA SHEET ON DWG E-500 FOR LUMINAIRES DESCRIPTION.
2. BASE BID: PROVIDE UNDERGROUND 1" CONDUIT FROM LIGHTING CONTACTOR TO THE LIGHTING POLES AND STUB UP AT THE POLES LOCATION. ALTERNATE 3: PROVIDE (2)#6 AND (1)#10G IN UNDERGROUND CONDUIT FOR CIRCUIT TO SUPPORT TYPE L1 LIGHT POLES FROM LIGHTING CONTACTOR MOUNTED ON THE BASEBOARD.
3. ALTERNATE 5: MUSCO TO PROVIDE REPLACEMENT OF BALLASTS AND CAPACITORS FOR SPORTS LIGHTING POLES (16 BALLASTS PER EACH POLE).
4. NOT USED

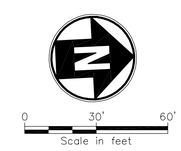

Drawing Copyright © 2015

CHA
6 Campus Drive
Parsippany, NJ 07054-4406
973.538.2120 · www.chacompanies.com

IT IS A VIOLATION OF LAW FOR ANY PERSON, UNLESS THEY ARE ACTING UNDER THE DIRECTION OF A LICENSED PROFESSIONAL ENGINEER, ARCHITECT, LANDSCAPE ARCHITECT OR LAND SURVEYOR TO ALTER AN ITEM IN ANY WAY. IF AN ITEM BEARING THE STAMP OF A LICENSED PROFESSIONAL IS ALTERED, THE ALTERING ENGINEER, ARCHITECT, LANDSCAPE ARCHITECT OR LAND SURVEYOR SHALL STAMP THE DOCUMENT AND INCLUDE THE NOTATION "ALTERED BY" FOLLOWED BY THEIR SIGNATURE, THE DATE OF SUCH ALTERATION, AND A SPECIFIC DESCRIPTION OF THE ALTERATION.

PIONEERS

WILLIAM PATERSON UNIVERSITY

SOCCER FIELD IMPROVEMENTS

300 POMPTON RD.
WAYNE, NJ 07470

No.	Submittal / Revision	App'd.	By	Date
2	ADD. NO. 1	SR	LH	XX/XX/XX
1	CONSTRUCTION DOCUMENTS	SR	LH	01/11/16

ELECTRICAL SITE LIGHTING PLAN

Designed By:	Drawn By:	Checked By:
SR	LH	JD
Issue Date:	Project No:	Scale:
01/11/2016	30059	AS SHOWN

Drawing No.:

E-200

File: V:\PROJECTS\ANY\X4\30059\CADD_ACAD\E-200-30059.DWG
Saved: 1/25/2016 3:01:33 PM Plotted: 1/25/2016 9:18:26 AM Current User: Havens, Leslie LastSavedBy: 3840

2 LIGHTING FIXTURE SCHEDULE

SYMBOL	TAG	TYPE	DISCRIPTION	MOUNTING	LAMP(S)	BALLAST(S) [INPUT WATTS]	VOLTS	MANUFACTURER & CATALOG NUMBER	COMMENTS
	L3	LED	6" LED DOWNLIGHT	RECESSED IN CEILING/CANOPY	(1) 10W LED	10W	120	UNIVERSAL 120-277V. PROVIDE LED BULB, PROVED ACRYLIC LENS ENCLOSURE	ALTERNATE 2
	L4	LED	LED EMERGENCY FLOOD LIGHT WITH MINIMUM 90 MIN. BATTERY BACK-UP; 5000K	WALL	(1) 30W LED	30W	120	LITHONIA #WST LED SERIES	ALTERNATE 2
	L5	LED	1'X4' LED SURFACE MOUNTED WRAP AROUND	CEILING	65W LED	65W	120	COOPER LIGHTING-METALUX 4WNLED-LD1-54-F-UNV-L835-CD1-U	ALTERNATE 2
EM-1	EX	LED	EMERGENCY LIGHT WITH BATTERY PACK	SURFACE	(2) 12W LED	24W	120	LITHONIA IND124 H1212 OR APPROVED EQUAL	ALTERNATE 2
	L1	LED	17' SITE LIGHT POLE WITH TOP MOUNT LUMINAIRE AND ROUND ALUMINUM NON-TAPERED POLE, DARK BRONZE	POLE	(60) LED	64W	120	KIM LIGHTING; CC21-LEDPB SERIES CAT#: CC21P2E35-A-120L4K277-DB-5.00 KIM LIGHTING POLE CAT#: PRA16-34188-FM-DB	ALTERNATE 3: PROVIDE 17' POLE, POLE BASE AND LUMINAIRE TO MATCH EXISTING

2

LOCATION: RESTROOM UTILITY CLOSET
MOUNTING: SURFACE
SOURCE: 25KVA XFMR

PANEL ID: LVP-1

VOLTS, PHASE, WIRE: 208/120V 1PH 3W
MAINS: 100A MCB
SHORT CIRCUIT RATING: 14 KAIC

CKT	LOAD DESCRIPTION	CB AMPS/ POLE	CONN LOAD KVA	CONN LOAD KVA	CONN LOAD KVA	CONN LOAD KVA	CB AMPS/ POLE	LOAD DESCRIPTION	CKT
1	ELECTRIC WATER HEATER EWH-1	30/2	2.5			0.18	20/1	WALL MOUNTED RECEPTACLE AT 7'AFF	2
3				2.5	0.18		20/1	WALL MOUNTED RECEPTACLE AT 7'AFF	4
5	OUTDOOR GRINDER PUMP	20/2	0.96			0.18	20/1	WALL MOUNTED RECEPTACLE AT 7'AFF	6
7				0.96			20/1	SPARE	8
9	EXTERIOR LIGHTING	20/1	0.09				20/1	SPACE	10
11	BATHROOM LIGHTING AND EF-1	20/1		0.19			20/1	SPACE	12
13	BATHROOM LIGHTING AND EF-2	20/1	0.19			0.18	20/1	BATHROOM RECEPTACLE	14
15	UTILITY CLOSET LIGHTING	20/1		0.13	0.18		20/1	BATHROOM RECEPTACLE	16
17	EMERGENCY LIGHTING	20/1	0.018			2.3	25/1	HAND DRYER	18
19	EXTERIOR GFI RECEPTACLES	20/1		0.54	2.3		25/1	HAND DRYER	20
21	GRINDER CONTROL PANEL	20/1	0.5				20/1	SPARE	22
23	RECEPTACLE	20/1		0.2			20/1	SPACE	24
25	SPACE	20/1					20/1	SPACE	26
27	SPACE	20/1					20/1	SPACE	28
29	SPACE	20/1					20/1	SPACE	30
			4.26	4.52	2.66	2.84			
			TOTAL kVA						
			14.28						

2 RESTROOM EQUIPMENT SCHEDULE – ARCHITECTURAL, HVAC & PLUMBING LOADS (ALTERNATE 2)

TAG	DESCRIPTION	LOCATION	LOAD	VOLTAGE	PHASE	FLA	KVA	FED FROM	O.C. DEVICE	FEEDER/BRANCH CIRCUIT	CONTROLLER	DISCONNECT	REMARKS
EWH-1	ELECTRIC WATER HEATER	MECH. ROOM 102	5KW	208	1	24	5	LVP-1/1,3	30/2	3/4"C, (2)#10, (1)#10G	ITEGRAL WITH UNIT	30/2 DISCONNECT SWITCH	
EF-1	EXHAUST FAN	CEILING	0.128 KW	120	1	1.07A	0.16	LIGHTING CIRCUIT	20/1	3/4"C, (2)#12, (1)#12G	CONTROLLED BY LIGHTING OCCUPANCY SENSOR SWITCH	INTEGRAL WITH UNIT	CONNECTED TO THE LIGHTING CIRCUIT
EF-2	EXHAUST FAN	CEILING	0.128 KW	120	1	1.07A	0.16	LIGHTING CIRCUIT	20/1	3/4"C, (2)#12, (1)#12G	CONTROLLED BY LIGHTING OCCUPANCY SENSOR SWITCH	INTEGRAL WITH UNIT	CONNECTED TO THE LIGHTING CIRCUIT
EF-3	EXHAUST FAN	CEILING	0.128 KW	120	1	1.07A	0.16	LIGHTING CIRCUIT	20/1	3/4"C, (2)#12, (1)#12G	CONTROLLED BY LIGHTING OCCUPANCY SENSOR SWITCH	INTEGRAL WITH UNIT	CONNECTED TO THE LIGHTING CIRCUIT
GP-1	GRINDER PUMP	OUTDOOR	1 HP	208	1	9.2A	1.92	LVP-1/5,7	20/2	1"C (2)#12, (1)#12G	CONTROL PANEL	DISCONNECT SWITCH IN NEMA 3R ENCLOSURE	CONTROL PANEL FURNISHED WITH GRINDER AND INSTALLED BY EC
HD-1	HAND DRYER	WALL	2.3 KW	120	1	19.2A	2.3	LVP-1/20	25/1	3/4"C, (2)#10, (1)#10G	INTEGRAL WITH UNIT	INTEGRAL WITH UNIT	
HD-2	HAND DRYER	WALL	2.3 KW	120	1	19.2A	2.3	LVP-1/18	25/1	3/4"C, (2)#10, (1)#10G	INTEGRAL WITH UNIT	INTEGRAL WITH UNIT	

Drawing Copyright © 2015

CHA
6 Campus Drive
Parsippany, NJ 07054-4406
973.538.2120 · www.chacompanies.com

IT IS A VIOLATION OF LAW FOR ANY PERSON, UNLESS THEY ARE ACTING UNDER THE DIRECTION OF A LICENSED PROFESSIONAL ENGINEER, ARCHITECT, LANDSCAPE ARCHITECT OR LAND SURVEYOR TO ALTER AN ITEM IN ANY WAY. IF AN ITEM BEARING THE STAMP OF A LICENSED PROFESSIONAL IS ALTERED, THE ALTERING ENGINEER, ARCHITECT, LANDSCAPE ARCHITECT OR LAND SURVEYOR SHALL STAMP THE DOCUMENT AND INCLUDE THE NOTATION "ALTERED BY" FOLLOWED BY THEIR SIGNATURE, THE DATE OF SUCH ALTERATION, AND A SPECIFIC DESCRIPTION OF THE ALTERATION.

PIONEERS

WILLIAM PATERSON UNIVERSITY

SOCCER FIELD IMPROVEMENTS

300 POMPTON RD.
WAYNE, NJ 07470

No.	Submittal / Revision	App'd.	By	Date
2	ADD. NO. 1	SR	LH	XX/XX/XX
1	CONSTRUCTION DOCUMENTS	SR	LH	01/11/16

ELECTRICAL LIGHTING AND EQUIPMENT SCHEDULES, WIRING DIAGRAMS

Designed By:	Drawn By:	Checked By:
SR	LH	JD
Issue Date: 01/11/2016	Project No: 30059	Scale: AS SHOWN

Drawing No.:

E-500

File: V:\PROJECTS\ANY\X4\30059\CADD_ACADVE-500-30059.DWG
Saved: 1/25/2016 3:03:32 PM Plotted: 1/25/2016 9:19:20 AM Current User: Havens, Leslie LastSavedBy: 3840

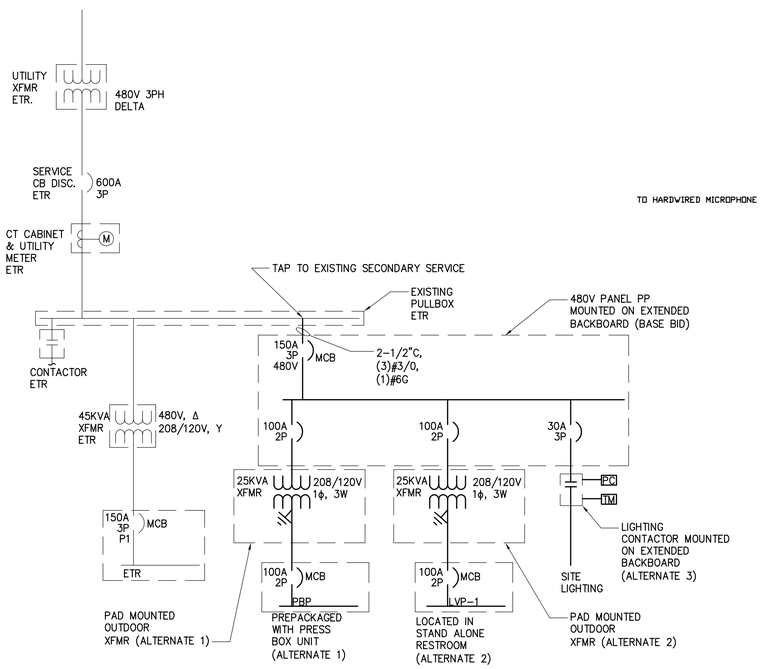

2 ELECTRICAL ONE-LINE DIAGRAM
NOT TO SCALE

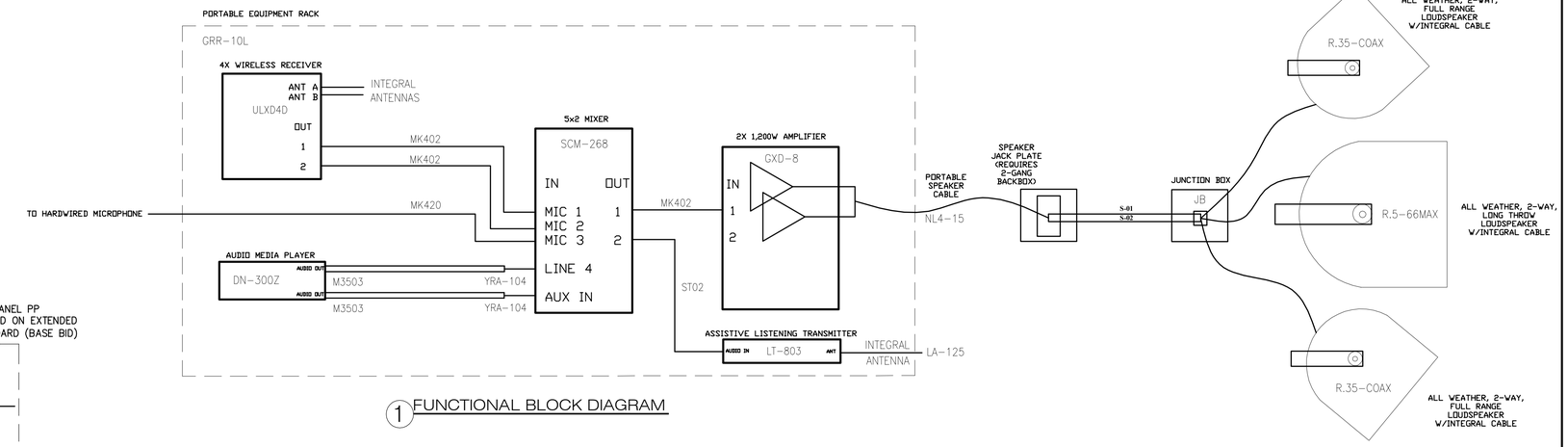

1 FUNCTIONAL BLOCK DIAGRAM

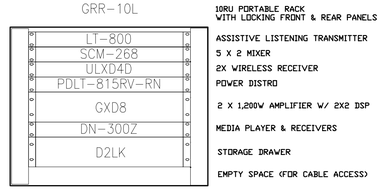

2 RACK ELEVATIONS
NOT TO SCALE

ELECTRICAL CONTRACTOR TO PROVIDE DEDICATED 15AMP CIRCUIT WITH DUPLEX OUTLET LOCATED NEAR EQUIPMENT RACK

3 POWER NOTES

ALL FIELD LOCATIONS AND MOUNTING METHODS TO BE FIELD DETERMINED BY SOUND SUBCONTRACTOR AND ENGINEER

4 INSTALLATION NOTES

GENERAL NOTES

1. ALL WORK SHOWN ON THIS DWG SHALL BE PROVIDED BY ELECTRICAL CONTRACTOR. PROVIDE ALL EQUIPMENT, WIRING BOXES, MOUNTING HARDWARE FOR A COMPLETE SYSTEM. WHEN INSTALLATION AND TESTING IS COMPLETE CONTRACTOR SHALL DEMONSTRATE SYSTEM OPERATION TO OWNER.
2. SPEAKERS SHALL BE MOUNTED ON FRONT OF PRESSBOX AS HIGH AS POSSIBLE.

LABEL	DESCRIPTION	EXAMPLE
A-XX	1 PAIR - AUDIO WIRE - 22AWG STRANDED, SHIELDED	BELDEN 9451 (PROVIDED)
S-XX	1 PAIR - SPEAKER WIRE - 12AWG STRANDED, UNSHIELDED	WHIRLWIND W12GA (PROVIDED)
WLM-X	1 PAIR - WIRELESS ANTENNA WIRE - RG-58 (INTEGRAL)	SHURE UA802 (PROVIDED)
ALS-X	1 - ASSISTIVE LISTENING ANTENNA - RG-59 (INTEGRAL)	LISTEN LA-125 (PROVIDED)

5 WIRE KEY

1 PRESSBOX PA SYSTEM BLOCK DIAGRAM (ALTERNATE 1)
- NOT TO SCALE

Drawing Copyright © 2015

CHA
6 Campus Drive
Parsippany, NJ 07054-4406
973.538.2120 · www.chacompanies.com

IT IS A VIOLATION OF LAW FOR ANY PERSON, UNLESS THEY ARE ACTING UNDER THE DIRECTION OF A LICENSED PROFESSIONAL ENGINEER, ARCHITECT, LANDSCAPE ARCHITECT OR LAND SURVEYOR TO ALTER AN ITEM IN ANY WAY. IF AN ITEM BEARING THE STAMP OF A LICENSED PROFESSIONAL IS ALTERED, THE ALTERING ENGINEER, ARCHITECT, LANDSCAPE ARCHITECT OR LAND SURVEYOR SHALL STAMP THE DOCUMENT AND INCLUDE THE NOTATION, "ALTERED BY" FOLLOWED BY THEIR SIGNATURE, THE DATE OF SUCH ALTERATION, AND A SPECIFIC DESCRIPTION OF THE ALTERATION.

PIONEERS

WILLIAM PATERSON UNIVERSITY

SOCCER FIELD IMPROVEMENTS

300 POMPTON RD.
WAYNE, NJ 07470

No.	Submittal / Revision	App'd.	By	Date
2	ADD. NO. 1	SR	LH	XX/XX/XX
1	CONSTRUCTION DOCUMENTS	SR	LH	01/11/16

ELECTRICAL ONE-LINE DIAGRAM

Designed By:	Drawn By:	Checked By:
SR	LH	JD
Issue Date: 01/11/2016	Project No: 30059	Scale: AS SHOWN

Drawing No.:
E-600

File: V:\PROJECTS\ANY\K4\30059\CADD_ACAD\E-600-30059.DWG
Saved: 1/25/2016 3:54:02 PM Plotted: 1/26/2016 9:20:16 AM Current User: Havens, Leslie LastSavedBy: 3840

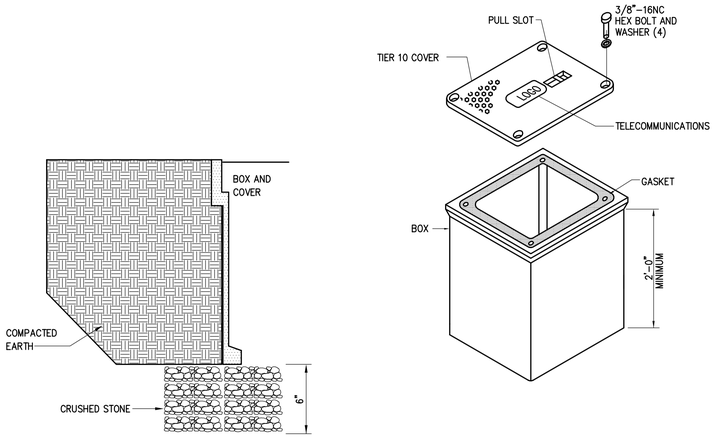

NOTES
1. SIZE HANDHOLE AT EACH LOCATION PER NEC. MINIMUM SIZE SHALL BE 18" x 18" x 24".
2. ALL CONDUITS SHALL BE PROVIDED WITH A PULL ROPE.
3. REPLACE EXISTING SURFACE CONDITIONS IN KIND TO INCLUDE, BUT NOT LIMITED TO: CONCRETE, CRUSHED STONE, SELECT GRAVEL, ASPHALT CONCRETE, TOPSOIL AND GRASS.
4. PROVIDE DIVIDED HANDHOLE TO SEPARATE POWER WIRING FROM COMMUNICATION AND SPEAKER WIRING.

1 HANDHOLE – DETAIL
– NOT TO SCALE

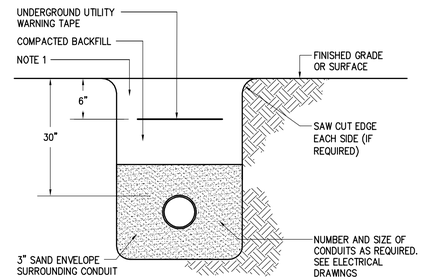

NOTE
1. REPLACE EXISTING SURFACE CONDITIONS IN KIND TO INCLUDE, BUT NOT LIMITED TO: CONCRETE, CRUSHED STONE, SELECT GRAVEL, ASPHALT, TOPSOIL AND GRASS.

2 UNDERGROUND CONDUIT
– NOT TO SCALE

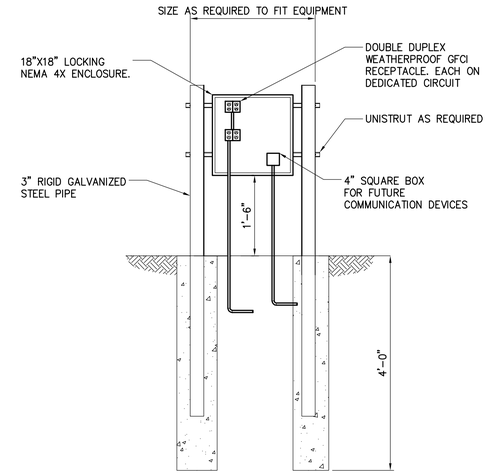

3 FIELD POWER BOX DETAIL △
– NOT TO SCALE

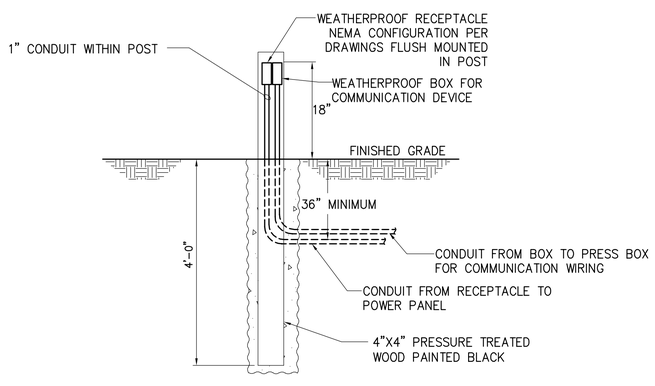

4 POWER PEDESTAL
– NOT TO SCALE

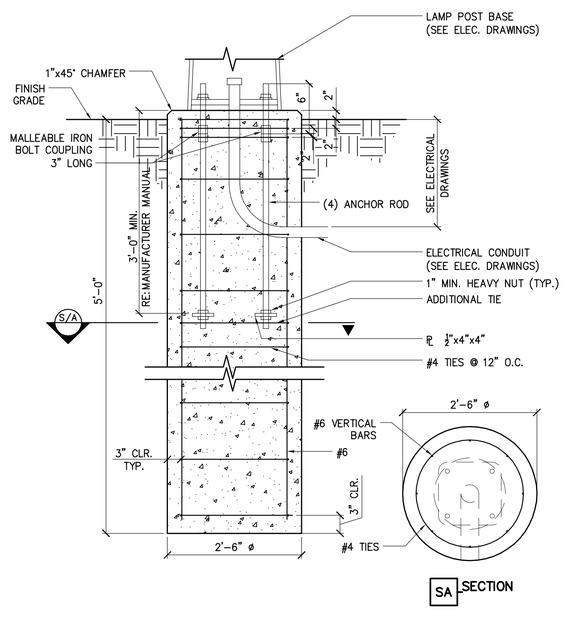

SA SECTION

6 LIGHT POLE BASE DETAIL
– NOT TO SCALE

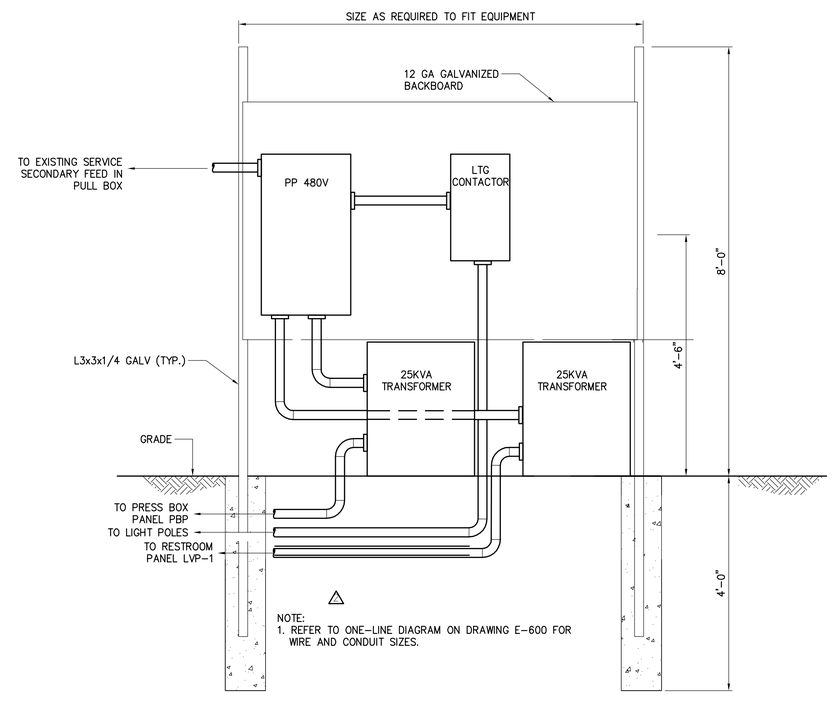

△
NOTE:
1. REFER TO ONE-LINE DIAGRAM ON DRAWING E-600 FOR WIRE AND CONDUIT SIZES.

5 BACKBOARD DETAIL △
– NOT TO SCALE

Drawing Copyright © 2015

CHA
6 Campus Drive
Parsippany, NJ 07054-4406
973.538.2120 · www.chacompanies.com

IT IS A VIOLATION OF LAW FOR ANY PERSON, UNLESS THEY ARE ACTING UNDER THE DIRECTION OF A LICENSED PROFESSIONAL ENGINEER, ARCHITECT, LANDSCAPE ARCHITECT OR LAND SURVEYOR TO ALTER AN ITEM IN ANY WAY. IF AN ITEM BEARING THE STAMP OF A LICENSED PROFESSIONAL IS ALTERED, THE ALTERING ENGINEER, ARCHITECT, LANDSCAPE ARCHITECT OR LAND SURVEYOR SHALL STAMP AND SIGN THE DOCUMENT AND INCLUDE THE NOTATION, "ALTERED BY" FOLLOWED BY THEIR SIGNATURE, THE DATE OF SUCH ALTERATION, AND A SPECIFIC DESCRIPTION OF THE ALTERATION.

PIONEERS

WILLIAM PATERSON UNIVERSITY

SOCCER FIELD IMPROVEMENTS

300 POMPTON RD.
WAYNE, NJ 07470

No.	Submittal / Revision	App'd.	By	Date
△	ADD. NO. 1	SR	LH	XX/XX/XX
1	CONSTRUCTION DOCUMENTS	SR	LH	01/11/16

ELECTRICAL DETAILS

Designed By:	Drawn By:	Checked By:
SR	LH	JD
Issue Date: 01/11/2016	Project No: 30059	Scale: AS SHOWN

Drawing No.:
E-700

File: V:\PROJECTS\ANY\X4\30059\CADD_ACAD\E-700-30059.DWG
Saved: 1/25/2016 4:02:24 PM Plotted: 1/26/2016 9:21:29 AM Current User: Havens, Leslie LastSavedBy: 3840

ABBREVIATIONS	
CFM	CUBIC FEET PER MINUTE
PH	PHASE
RPM	REVOLUTIONS PER MINUTE
ESP	EXTERNAL STATIC PRESSURE
TYP	TYPICAL
VOLT	VOLTAGE
W	WATT

DUCTWORK SYMBOLS

RETURN/EXHAUST DUCT UP

FLEXIBLE DUCT CONNECTION

AIR FLOW

BRICK VENTS SCHEDULE

TAG	LOCATION	SERVICE	WIDTH (IN)	HEIGHT (IN)	MIN FREE AREA	MATERIAL	FINISH	MANUFACTURER & MODEL#	REMARKS
BV-1	SEE PLANS	OA INTAKE	8"	5"	80%	ALUMINUM	BAKED ENAMEL	GREENHECK BVE	PROVIDE ALUMINUM ARCHITECTURAL LOUVER SUITABLE TO PREVENT WIND DRIVEN RAIN FROM GETTING THROUGH WITH ALUMINUM INSECT SCREEN ON INSIDE. COORDINATE FINAL BRICK VENT COLOR AND FINISH WITH BUILDING ELEMENTS. PROVIDE EPOXY COATING FOR ENTIRE LOUVER WITH COMPONENTS. PROVIDE ALL LOUVER ACCESSORIES REQUIRED FOR COMPLETE INSTALLATION.

FAN SCHEDULE

TAG	LOCATION	SERVICE	TYPE	CFM	ESP (IN WG)	FAN MOTOR DATA				MANUFACTURER & MODEL#	REMARKS
						RPM	W	VOLT	PH		
EF-1	TOILET ROOM 101	EXHAUST	CEILING MOUNTED	150	0.25	1050	128	120	1	GREENHECK SP-B150	PROVIDE MOUNTING HARDWARE/FRAME/ACCESSORIES REQUIRED TO MOUNT FAN PER MANUFACTURER SPECIFICATIONS AND REQUIREMENTS. COORDINATE WITH CEILING CONSTRUCTION AND MATERIALS. PROVIDE FACTORY MOUNTED DISCONNECT, WHITE ALUMINUM GRILLE, AND MANUFACTURER'S STANDARD WALL CAP WITH INSECT SCREEN AND POWDER COATED FINISH. COORDINATE CUSTOM WALL CAP COLOR WITH ARCHITECT. EACH EXHAUST FAN SHALL OPERATE WITH ROOM LIGHT SWITCH. PROVIDE TIME DELAY SWITCH TO KEEP EXHAUST FAN OPERATIONAL FOR 30 MINUTES AFTER THE LIGHT SWITCH HAS BEEN TURNED OFF.
EF-2	TOILET ROOM 103	EXHAUST	CEILING MOUNTED	150	0.25	1050	128	120	1	GREENHECK SP-B150	
EF-3	MECHANICAL ROOM 102	EXHAUST	CEILING MOUNTED	75	0.25	900	54	120	1	GREENHECK SP-B80	

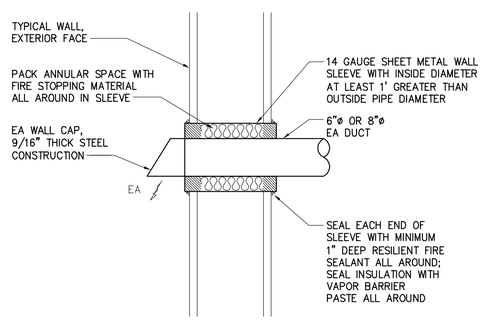

1 EXHAUST AIR WALL CAP & DUCT PENETRATION DETAIL
NOT TO SCALE

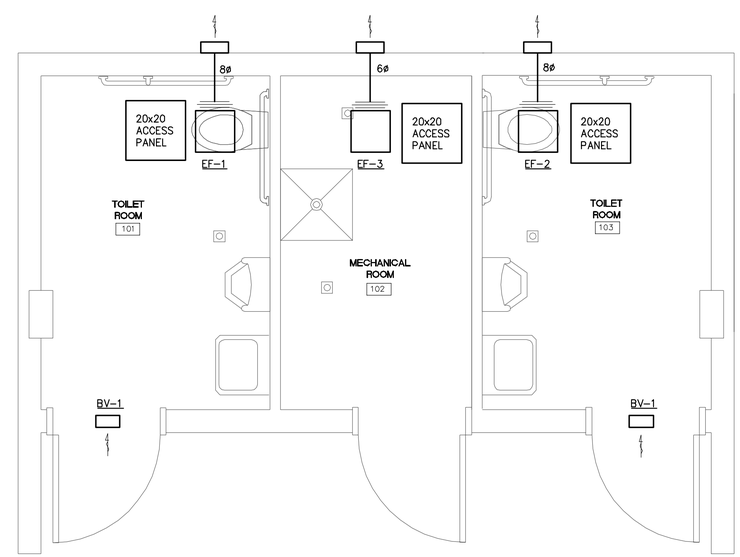

FIRST FLOOR MECHANICAL PLAN
SCALE: 1/2" = 1'-0"

Drawing Copyright © 2015

CHA
6 Campus Drive
Parsippany, NJ 07054-4406
973.538.3320 • www.chacompanies.com

IT IS A VIOLATION OF LAW FOR ANY PERSON, UNLESS THEY ARE ACTING UNDER THE DIRECTION OF A LICENSED PROFESSIONAL ENGINEER, ARCHITECT, LANDSCAPE ARCHITECT OR LAND SURVEYOR TO ALTER AN ITEM IN ANY WAY. IF AN ITEM BEARING THE STAMP OF A LICENSED PROFESSIONAL IS ALTERED, THE ALTERING ENGINEER, ARCHITECT, LANDSCAPE ARCHITECT OR LAND SURVEYOR SHALL STAMP THE DOCUMENT AND INCLUDE THE NOTATION "ALTERED BY" FOLLOWED BY THEIR SIGNATURE, THE DATE OF SUCH ALTERATION, AND A SPECIFIC DESCRIPTION OF THE ALTERATION.

PIONEERS

WILLIAM PATERSON UNIVERSITY

SOCCER FIELD IMPROVEMENTS

300 POMPTON RD.
WAYNE, NJ 07470

No.	Submittal / Revision	App'd.	By	Date
2	ADD. NO. 1			01/25/16
1	CONSTRUCTION DOCUMENTS			01/11/16

RESTROOM BUILDING MECHANICAL PLAN

Designed By:	Drawn By:	Checked By:
WM	TM	XXX
Issue Date: 01/11/2016	Project No: 30059	Scale: AS SHOWN

Drawing No.:
M-1

File: V:\PROJECTS\ANYX4\30059\CADD_ACAD\M-1-30059.DWG
Saved: 1/15/2016 3:26:46 PM Plotted: 1/26/2016 7:48:15 AM Current User: Markwin, Tim LastSavedBy: 5539

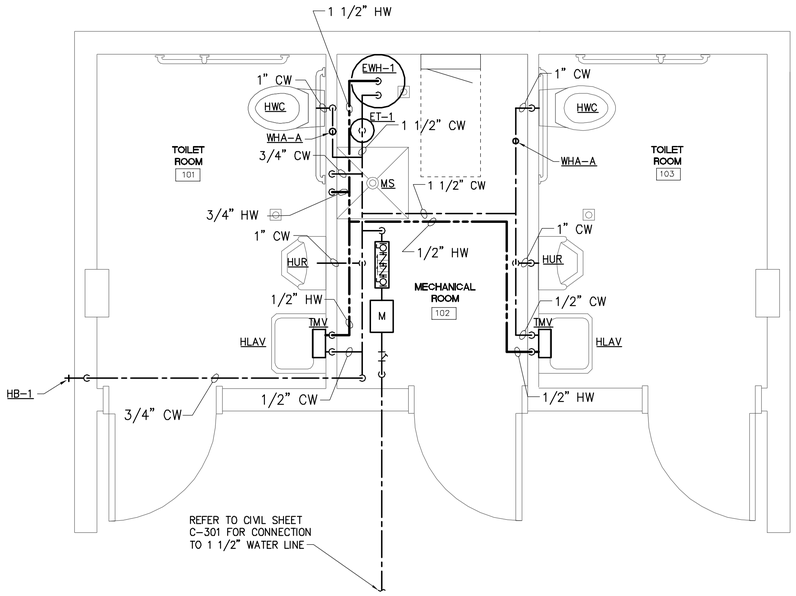

FIRST FLOOR POTABLE PIPING PLAN

SCALE: 1/2" = 1'

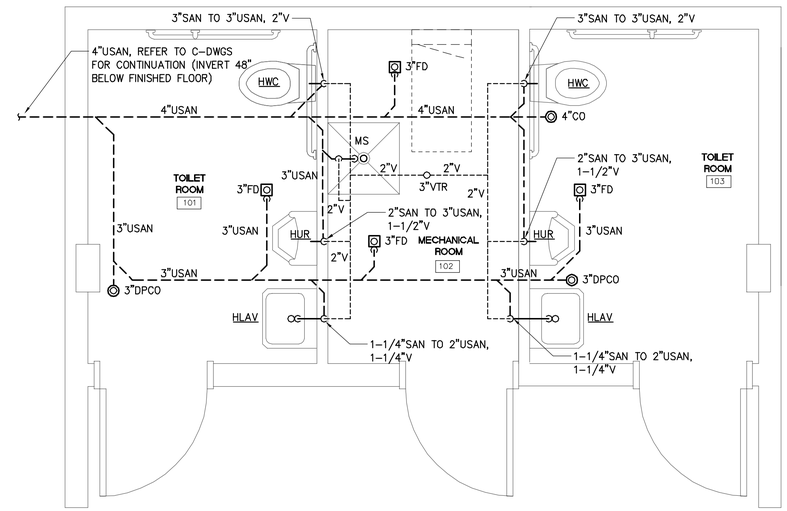

FIRST FLOOR DRAINAGE AND VENT PIPING PLAN

SCALE: 1/2" = 1'

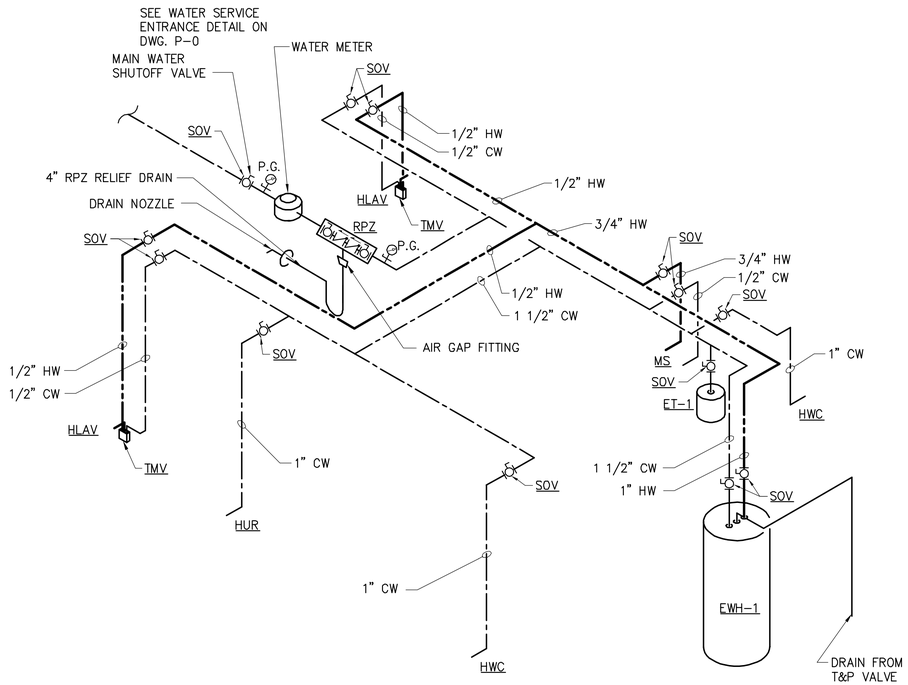

FIRST FLOOR POTABLE PIPING PLAN

SCALE: NOT TO SCALE

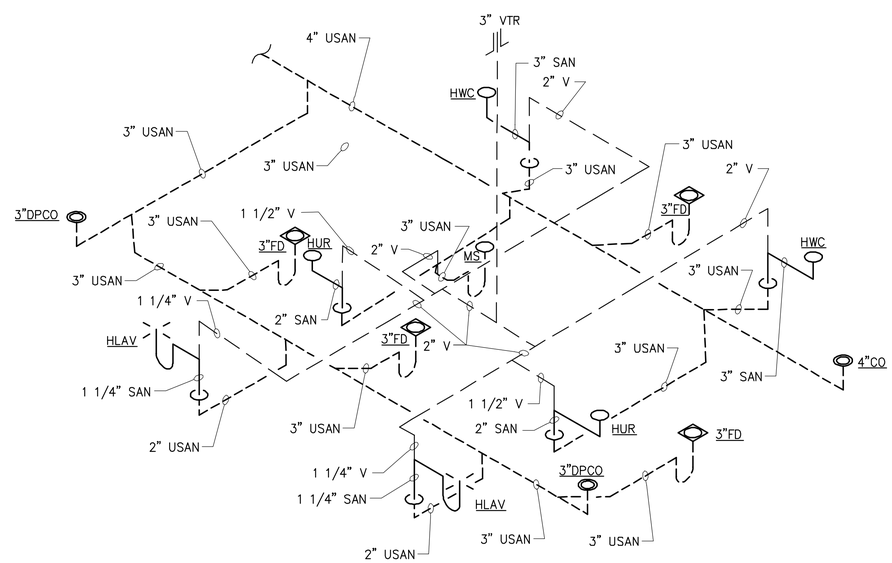

FIRST FLOOR DRAINAGE AND VENT PIPING PLAN

SCALE: NOT TO SCALE

Drawing Copyright © 2015

CHA
6 Campus Drive
Parsippany, NJ 07054-4406
973.538.3320 • www.chacompanies.com

IT IS A VIOLATION OF LAW FOR ANY PERSON, UNLESS THEY ARE ACTING UNDER THE DIRECTION OF A LICENSED PROFESSIONAL ENGINEER, ARCHITECT, LANDSCAPE ARCHITECT OR LAND SURVEYOR TO ALTER AN ITEM IN ANY WAY. IF AN ITEM BEARING THE STAMP OF A LICENSED PROFESSIONAL IS ALTERED, THE ALTERING ENGINEER, ARCHITECT, LANDSCAPE ARCHITECT OR LAND SURVEYOR SHALL STAMP THE DOCUMENT AND INCLUDE THE NOTATION "ALTERED BY" FOLLOWED BY THEIR SIGNATURE, THE DATE OF SUCH ALTERATION, AND A SPECIFIC DESCRIPTION OF THE ALTERATION.

PIONEERS

WILLIAM PATERSON UNIVERSITY

SOCCER FIELD IMPROVEMENTS

300 POMPTON RD.
WAYNE, NJ 07470

No.	Submittal / Revision	App'd.	By	Date
2	ADD. NO. 1			01/25/16
1	CONSTRUCTION DOCUMENTS			01/11/16

RESTROOM BUILDING PLUMBING PLAN

Designed By:	Drawn By:	Checked By:
WM	TM	XXX
Issue Date:	Project No:	Scale:
01/11/2016	30059	AS SHOWN

Drawing No.:

P-1

2

File: V:\PROJECTS\ANY\K4\30059\CAD0_ACAD\P-1-30059.DWG
Saved: 1/19/2016 4:01:06 PM Plotted: 1/26/2016 7:50:07 AM Current User: Merkein, Tim LastSavedBy: 5539

GENERAL NOTES

1. REFER TO RESTROOM EQUIPMENT SCHEDULE ON DWG. E-500 FOR CIRCUIT INFORMATION.
2. REFER TO MECHANICAL DRAWINGS FOR EXACT EQUIPMENT LOCATION.
3. REFER TOLIGHTING FIXTURE SCHEDULE ON DWG. E-500 FOR LIGHT FIXTURES DATA.

CODED NOTES

1. NOT USED
2. PROVIDE CONDUIT AND WIRING TO INTERLOCK EXHAUST FANS WITH OCCUPANCY SENSOR WALL SWITCHES.
3. FURNISH AND INSTALL ELECTRIC HAND DRYER AND MOUNT ON THE WALL AS PER MANUFACTURER RECOMMENDATIONS. PROVIDE CONDUIT AND WIRING AS PER EQUIPMENT SCHEDULE ON DRAWING E-500.
4. FURNISH AND INSTALL LIGHTING CONTACTOR WITH TORK, MODEL E101B, DIGITAL LIGHTING TIMER, PHOTOCELL, AND ALL ASSOCIATED EQUIPMENT TO CONTROL EXTERIOR LIGHTING. MOUNT PHOTOCELL ON EXTERIOR WALL AND TIE INTO TIMER TO CONTROL LIGHTING OPERATION. INSTALL CONTACTOR AND TIMER/PHOTOCELL PER MANUFACTURER RECOMMENDATIONS.
5. FURNISH AND INSTALL ELECTRICAL POWER CIRCUITS TO GRINDER PUMP AND PUMP CONTROLLER (PROVIDED BY OTHER). INSTALL PUMP CONTROLLER ON THE OUTSIDE WALL. ROUTE UNDERGROUND POWER AND CONTROL CIRCUITING FROM CONTROLLER TO PUMP AS PER MANUFACTURER'S INSTALLATION MANUAL. REFER TO CIVIL DRAWINGS FOR GRINDER PUMP EXACT LOCATION.
6. FURNISH AND INSTALL DISCONNECT SWITCH, CONDUIT, CONDUCTORS, AND ALL NECESSARY ACCESSORIES FOR ELECTRIC WATER HEATER, EWH-1. ELECTRIC WATER HEATER SUPPLIED BY PLUMBING CONTRACTOR. REFER TO EQUIPMENT SCHEDULE ON DRAWING E-500 FOR CIRCUITING DETAILS.
7. PROVIDE ALL CONDUIT, CONDUCTOR, AND ALL NECESSARY ACCESSORIES FOR COMPLETE CIRCUIT TO EXTERIOR LIGHTS.
8. FURNISH AND INSTALL SURFACE MOUNTED 208/120V, 1PH, 3W, 100A, 30 CIRCUITS PANEL WITH LOCKABLE COVERS. PROVIDE 3/4" PLYWOOD BEHIND PANEL FOR SUPPORT. REFER TO PANEL SCHEDULE LVP-1 FOR ADDITIONAL INFORMATION.

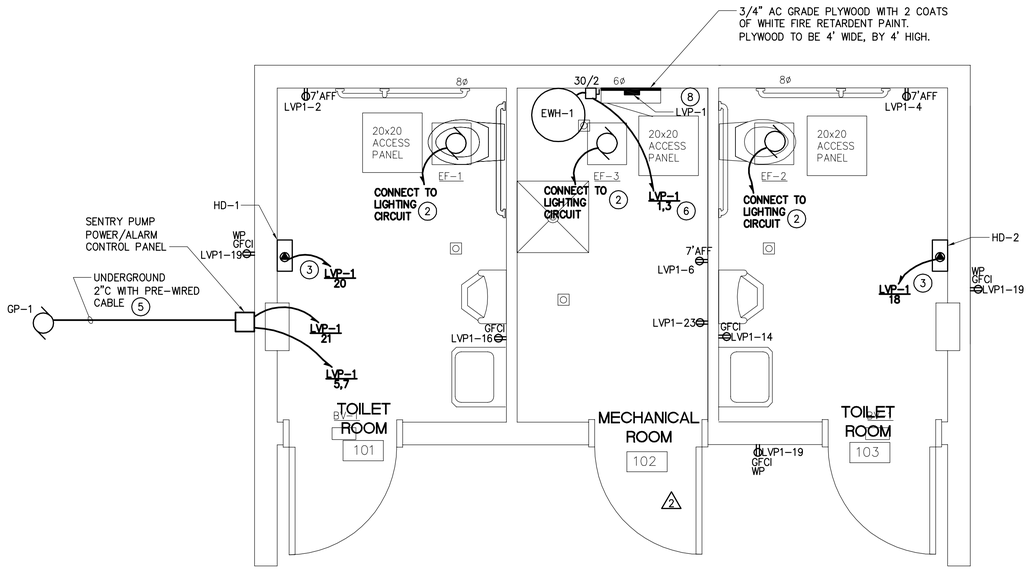

THE BUILDING WILL BE DRAINED AND WINTERIZED EACH FALL

ELECTRICAL POWER PLAN

SCALE: 1/2" = 1'-0"

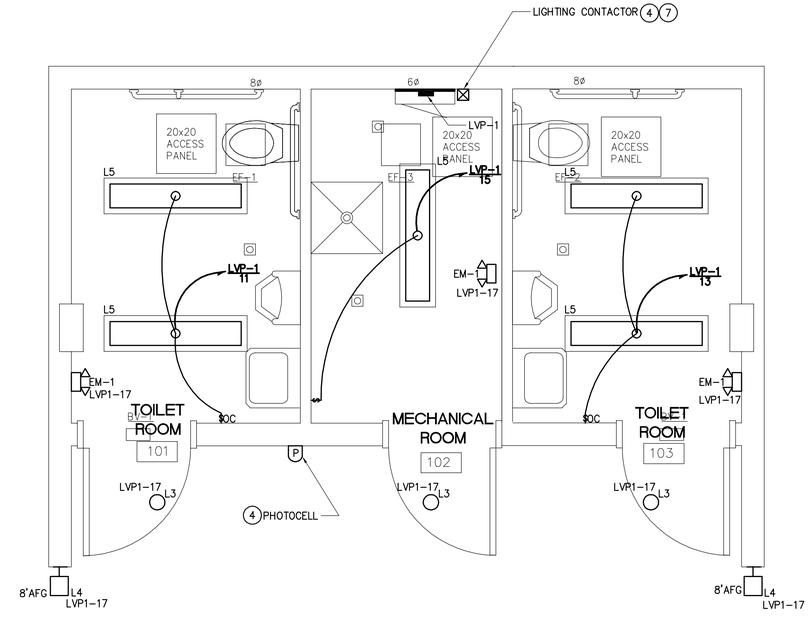

THE BUILDING WILL BE DRAINED AND WINTERIZED EACH FALL

LIGHTING PLAN

SCALE: 1/2" = 1'-0"

0 1 2 3 FEET

SCALE: 1 1/2"=1'-0"

Drawing Copyright © 2015

CHA
6 Campus Drive
Parsippany, NJ 07054-4406
973.538.2120 - www.chacompanies.com

IT IS A VIOLATION OF LAW FOR ANY PERSON, UNLESS THEY ARE ACTING UNDER THE DIRECTION OF A LICENSED PROFESSIONAL ENGINEER, ARCHITECT, LANDSCAPE ARCHITECT OR LAND SURVEYOR TO ALTER AN ITEM IN ANY WAY. IF AN ITEM BEARING THE STAMP OF A LICENSED PROFESSIONAL ENGINEER, ARCHITECT, LANDSCAPE ARCHITECT OR LAND SURVEYOR SHALL STAMP THE DOCUMENT AND INCLUDE THE NOTATION "ALTERED BY" FOLLOWED BY THEIR SIGNATURE, THE DATE OF SUCH ALTERATION, AND A SPECIFIC DESCRIPTION OF THE ALTERATION.

PIONEERS

WILLIAM PATERSON UNIVERSITY

SOCCER FIELD IMPROVEMENTS

300 POMPTON RD.
WAYNE, NJ 07470

No.	Submittal / Revision	App'd.	By	Date
2	ADD. NO. 1	SR	LH	XX/XX/XX
1	CONSTRUCTION DOCUMENTS	SR	LH	01/11/16

RESTROOM BUILDING ELECTRICAL PLAN

Designed By:	Drawn By:	Checked By:
SR	LH	JD
Issue Date: 01/11/2016	Project No: 30059	Scale: AS SHOWN

Drawing No.:

E-1

File: V:\PROJECTS\ANY\K4\30059\CADD_ACAD\E-1-30059.DWG
Saved: 1/25/2016 7:37:46 AM Plotted: 1/25/2016 9:16:03 AM Current User: Havens, Leslie LastSavedBy: 5184