CHAPTER 2 INSTALLATION

2.1 INTRODUCTION

This Chapter provides the descriptions and procedures necessary to unpack, inspect and install the AERCO Benchmark 2.0 Low NOx (LN) Boiler. Brief descriptions are also provided for each available mode of operation. Detailed procedures for implementing these modes are provided in Chapter 5.

2.2 RECEIVING THE UNIT

Each Benchmark 2.0LN System is shipped as a single crated unit. The shipping weight is approximately 1600 pounds. The unit must be moved with the proper rigging equipment for safety and to avoid equipment damage. The unit should be completely inspected for evidence of shipping damage and shipment completeness at the time of receipt from the carrier and before the bill of lading is signed.

NOTE

AERCO is not responsible for lost or damaged freight.

Each unit has a Tip-N-Tell indicator on the outside of the crate. This indicates if the unit has been turned on its side during shipment. If the Tip-N-Tell indicator is tripped, do not sign for the shipment. Note the information on the carrier's paperwork and request a freight claim and inspection by a claims adjuster before proceeding. Any other visual damage to the packaging materials should also be made clear to the delivering carrier.

2.3 UNPACKING

Carefully unpack the unit taking care not to damage the unit enclosure when cutting away packaging materials

A close inspection of the unit should be made to ensure that there is no evidence of damage not indicated by the Tip-N-Tell indicator. The freight carrier should be notified immediately if any damage is detected.

The following accessories come standard with each unit and are either packed separately within the unit's packing container or are factory installed on the boiler:

- Pressure/Temperature Gauge
- Spare Spark Igniter
- Spare Flame Detector
- ASME Pressure Relief Valve
- Condensate Drain Trap
- 2" Gas Supply Shutoff Valve

When ordered, optional accessories may be packed separately, packed within the boiler shipping container, or may be installed on the boiler. Any standard or optional accessories shipped loose should be identified and stored in a safe place until ready for installation or use.

2.4 SITE PREPARATION.

Ensure that the site selected for installation of the Benchmark 2.0LN Boiler includes:

- Access to AC Input Power at 120 VAC, Single-Phase, 60 Hz @ 20 Amps
- Access to Natural Gas line at a minimum pressure of 4 inches W.C. at 2,000 CFH

2.4.1 Installation Clearances

The unit must be installed with the prescribed clearances for service as shown in Figure 2-1. The minimum clearance dimensions, required by AERCO, are listed below. However, if Local Building Codes require additional clearances, these codes shall supersede AERCO's requirements. Minimum acceptable clearances required are:

- Sides: 24 inches
- Front : 24 inches
- Rear: 30 inches
- Top: 18 inches

All gas piping, water piping and electrical conduit or cable must be arranged so that they do not interfere with the removal of any panels, or inhibit service or maintenance of the unit.

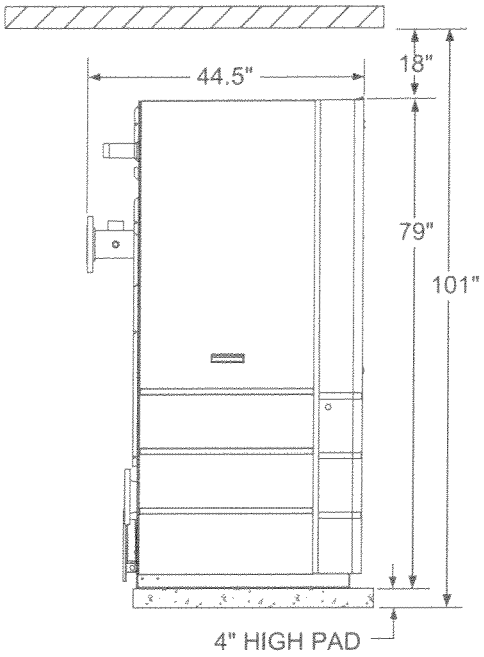

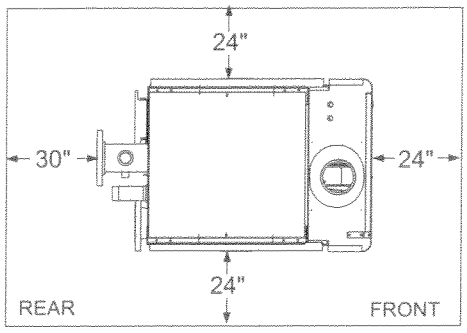

Figure 2-1 Benchmark 2.0LN Boiler Clearances

WARNING

KEEP THE UNIT AREA CLEAR AND FREE FROM ALL COMBUSTIBLE MATERIALS AND FLAMMABLE VAPORS OR LIQUIDS.

CAUTION

While packaged in the shipping container, the boiler must be moved by pallet jack or forklift from the FRONT ONLY.

IMPORTANT

The boiler installation must be installed by a plumber or gas fitter who is licensed within the Commonwealth of Massachusetts. In addition, the installation must comply with all requirements specified in Chapter 1 (Safety Precautions), pages 1-2 & 1-3.

2.4.2 Setting the Unit

The unit must be installed on a 4 inch to 6 inch housekeeping pad to ensure proper condensate drainage. If anchoring the unit, refer to the dimensional drawings in Appendix F for anchor locations. Two lifting tabs are provided at the top of the heat exchanger as shown in Figure 2-2. USE THE TABS SHOWN IN FIGURE 2-2 TO LIFT AND MOVE THE UNIT. Remove the top panel from the unit to provide access to the lifting tabs. Remove the four (4) lag screws securing the unit to the shipping skid. Lift the unit off the shipping skid and position it on the 4 inch to 6 inch housekeeping concrete pad (required) in the desired location.

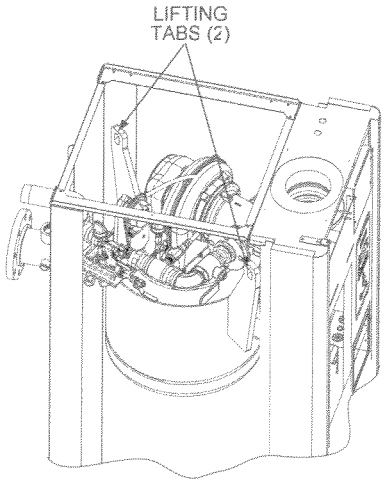

Figure 2-2
Partial Top View Showing Lifting Tab Locations

In multiple unit installations, it is important to plan the position of each unit in advance. Sufficient space for piping connections and future service/maintenance requirements must also be taken into consideration. All piping must include ample provisions for expansion.

If installing a Combination Control Panel (CCP) system, it is important to identify the Combination Mode Boilers in advance and place them in the proper physical location. Refer to Chapter 5 for information on Combination Mode Boilers.

2.5 SUPPLY AND RETURN PIPING

The Benchmark 2.0LN Boiler utilizes 4" 150# flanges for the water system supply and return piping connections. The physical location of the supply and return piping connections are on the rear of the unit as shown in Figure 2-3. Refer to Appendix F, Drawing AP-A-841 for additional dimensional data.

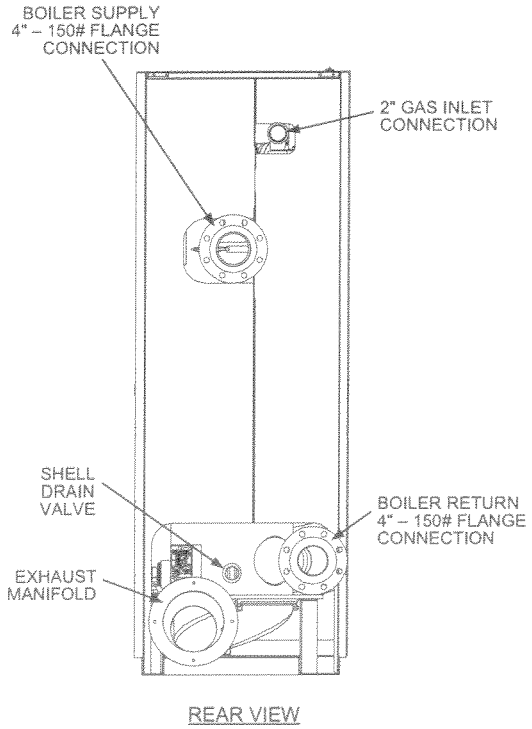

Figure 2-3
Supply and Return Locations

2.6 CONDENSATE DRAIN AND PIPING

The Boiler is designed to condense water vapor from the flue products. Therefore, the installation must have provisions for suitable drainage or collection. A 1/2" NPT drain connection is provided on the exhaust manifold as shown in Figure 2-4.

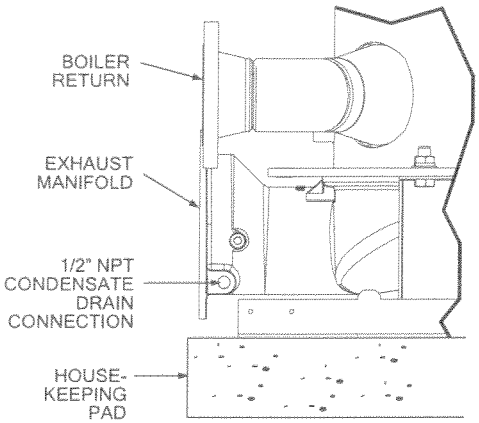

Figure 2-4
Condensate Drain Connection Location

A separate condensate drain trap (part no. 24060) is shipped loose and must be installed on the floor behind the unit. Connect the trap to the exhaust manifold as follows:

1. First, install a 1/2" NPT nipple in the condensate drain port shown in Figure 2.4.
2. Next, connect a 3/4-to-1/2" reducer to the 1/2" nipple.
3. Refer to Figure 2-5 and connect the condensate drain trap to the exhaust manifold as described in steps 4 through 7.
4. On the condensate drain trap, install 3/4" NPT nipples in the tapped inlet and outlet of the trap.
5. Attach a length of 1" I.D. polypropylene hose between the exhaust manifold drain and the inlet side of the condensate trap (Fig 2.5). Secure both ends of the hose with clamps.
6. Connect a second length of 1" I.D. hose to the outlet side of the condensate trap and route it to a nearby floor drain.
7. Drainage from the condensate drain trap outlet must be by gravity to a nearby floor drain.

If a floor drain is not available, a condensate pump can be used to remove the condensate to drain. The maximum condensate flow rate is 20 GPH. The condensate drain trap, associated fittings and drain line must be removable for routine maintenance. DO NOT hard pipe.

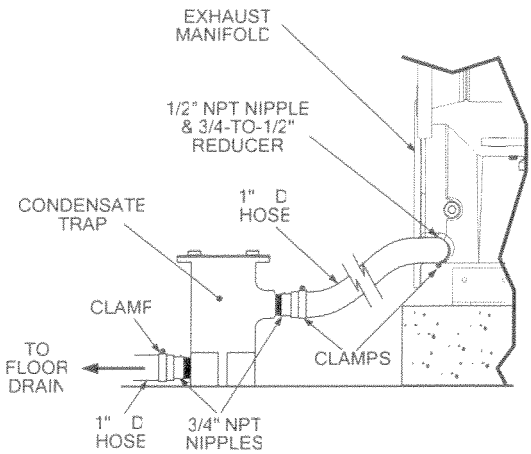

Figure 2.5
Condensate Trap Installation

2.7 GAS SUPPLY PIPING

The AERCO Benchmark 2.0LN Gas Components and Supply Design Guide, GF-2030LN must be consulted prior to designing or installing any gas supply piping.

WARNING

NEVER USE MATCHES, CANDLES, FLAMES OR OTHER SOURCES OF IGNITION TO CHECK FOR GAS LEAKS.

CAUTION

Many soaps used for gas pipe leak testing are corrosive to metals. Therefore, piping must be rinsed thoroughly with clean water after leak checks have been completed.

NOTE

All gas piping must be arranged so that it does not interfere with removal of any covers, inhibit service/maintenance, or restrict access between the unit and walls, or another unit.

A 2 inch gas inlet connection is located on the rear of the unit as shown in Figure 2-3.

Prior to installation, all pipes should be deburred and internally cleared of any scale, metal chips or other foreign particles. Do Not install any flexible connectors or unapproved gas fittings. Piping must be supported from the floor, ceiling or walls only and must not be supported by the unit.

A suitable piping compound, approved for use with natural gas, should be used. Any excess must be wiped off to prevent clogging of components.

To avoid unit damage when pressure testing gas piping, isolate the unit from the gas supply piping. At no time should the gas pressure applied to the unit exceed 2 psi. Leak test all external piping thoroughly using a soap and water solution or suitable equivalent. The gas piping used must meet all applicable codes.

2.7.1 Gas Supply Specifications.

The gas supply input specifications to the unit for Natural Gas are as follows:

The maximum static pressure to the unit must not exceed 2 psi. The minimum operating gas pressure for natural gas is 4 inches W.C. for both FM and IRI gas trains when the unit is firing at maximum input. The gas supply pressure to the unit must be of sufficient capacity to provide 2000 cfh while maintaining the gas pressure at 4 inches W.C. for FM or IRI gas trains.

2.7.2 Manual Gas Shutoff Valve

A manual shut-off valve must be installed in the gas supply line upstream of the Boiler as shown in Figure 2-6. Maximum allowable gas pressure to the Boiler is 2 psi

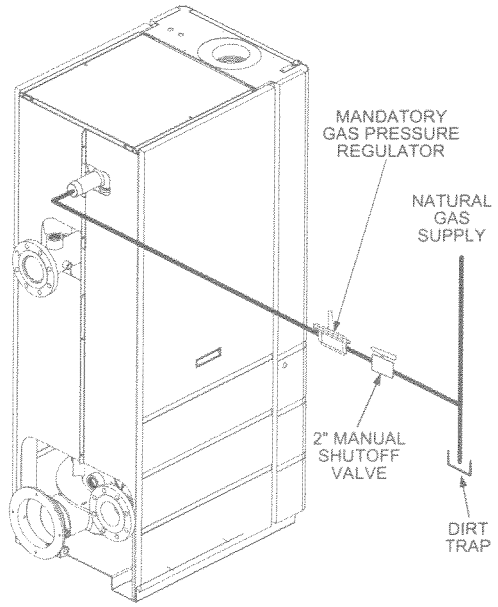

Figure 2-6
Manual Gas Shut-Off Valve Location

2.7.3 IRI Gas Train Kit

The IRI gas train is an optional gas train configuration which is required in some areas for code compliance or for insurance purposes. The IRI gas train is factory pre-piped and wired. See Appendix F, Drawing AP-A-843 for details.

2.8 AC ELECTRICAL POWER WIRING

The AERCO Benchmark 2.0LN Electrical Power Wiring Guide, GF-2060LN, must be consulted prior to connecting any AC power wiring to the unit. External AC power connections are made to the unit inside the Power Box on the front panel of the unit. Remove the front door of the unit to access the Power Box mounted directly above the Control Box. Loosen the four Power Box cover screws and remove cover to access the AC terminal connections inside the Power Box (Figure 2-7).

NOTE

All electrical conduit and hardware must be installed so that it does not interfere with the removal of any unit covers, inhibit service/maintenance, or prevent access between the unit and walls or another unit.

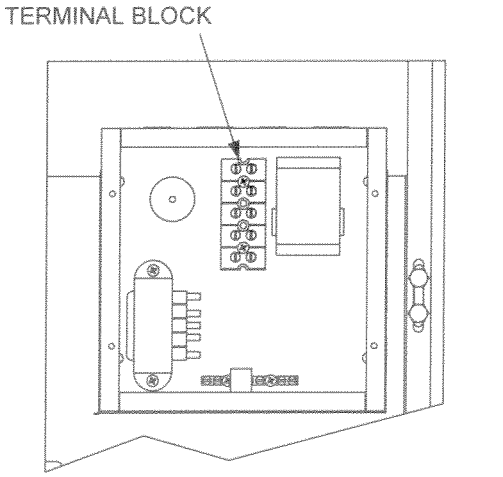

Figure 2-7
AC Input Terminal Block Location

2.8.1 Electrical Power Requirements

The AERCO Benchmark 2.0LN Boiler accepts 120 VAC, single-phase, 60 Hz @ 20A. The Power Box contains a terminal block as shown in Figure 2-8. In addition, a wiring diagram showing the required AC power connections is provided on the front cover of the Power Box.

Each Boiler must be connected to a dedicated electrical circuit. NO OTHER DEVICES SHOULD BE ON THE SAME ELECTRICAL CIRCUIT AS THE BOILER. A means for disconnecting AC power from the unit (such as a service switch) must be installed near the unit for normal operation and maintenance. All electrical connections should be made in accordance with the National Electrical Code and/or with any applicable local codes.

For electrical power wiring diagrams, see the AERCO Benchmark 2.0LN Electrical Power Wiring Guide, (GF-2060LN).

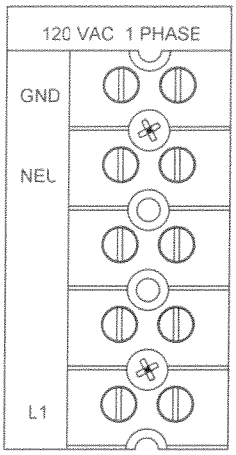

Figure 2-8
AC Terminal Block Configurations

2.9 MODES OF OPERATION AND FIELD CONTROL WIRING

The Benchmark 2.0LN Boiler is available in several different modes of operation. While each unit is factory configured and wired for its intended mode, some additional field wiring may be required to complete the installation. This wiring is typically connected to the Input/Output (I/O) Box located on the lower portion of the unit front panel (Figure 2-9) behind the removable front door.

To access the I/O Box terminal strips shown in Figure 2-10, loosen the four cover screws and remove the cover. All field wiring is installed from the rear of the panel by routing the wires through one of the four bushings provided.

Refer to the wiring diagram provided on the cover of the I/O Box (Figure 2-10) when making all wiring connections.

In addition to the terminal strips shown in Figure 2-9, the I/O Box also contains a pre-wired temperature transmitter which receives inlet air temperature sensor readings and transmits this signal to the variable frequency drive (VFD) contained in the Boiler. The VFD utilizes this input signal to adjust the rotation speed of the blower.

Brief descriptions of each mode of operation, and their wiring requirements, are provided in the following paragraphs. Additional information concerning field wiring is provided in paragraphs 2.10.1 through 2.10.10. Refer to Chapter 5 for detailed information on the available modes of operation.

2.9.1 Constant Setpoint Mode

The Constant Setpoint Mode is used when it is desired to have a fixed setpoint that does not deviate. No wiring connections, other than AC electrical power connections, are required for this mode. However, if desired, fault monitoring or enable/disable interlock wiring can be utilized (see paragraphs 2.10.9.1 and 2.10.10).

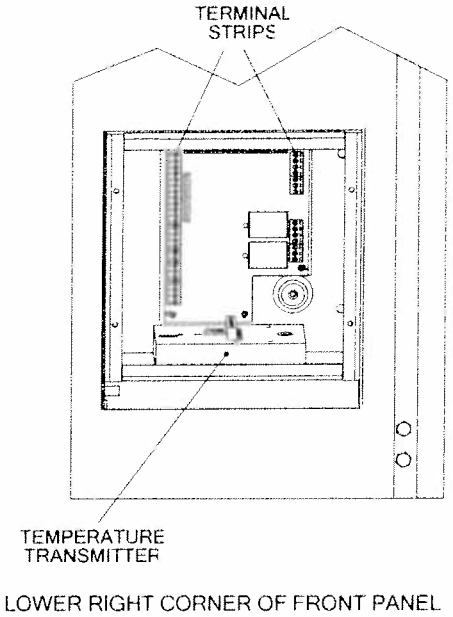

Figure 2-9. Input/Output (I/O) Box Location

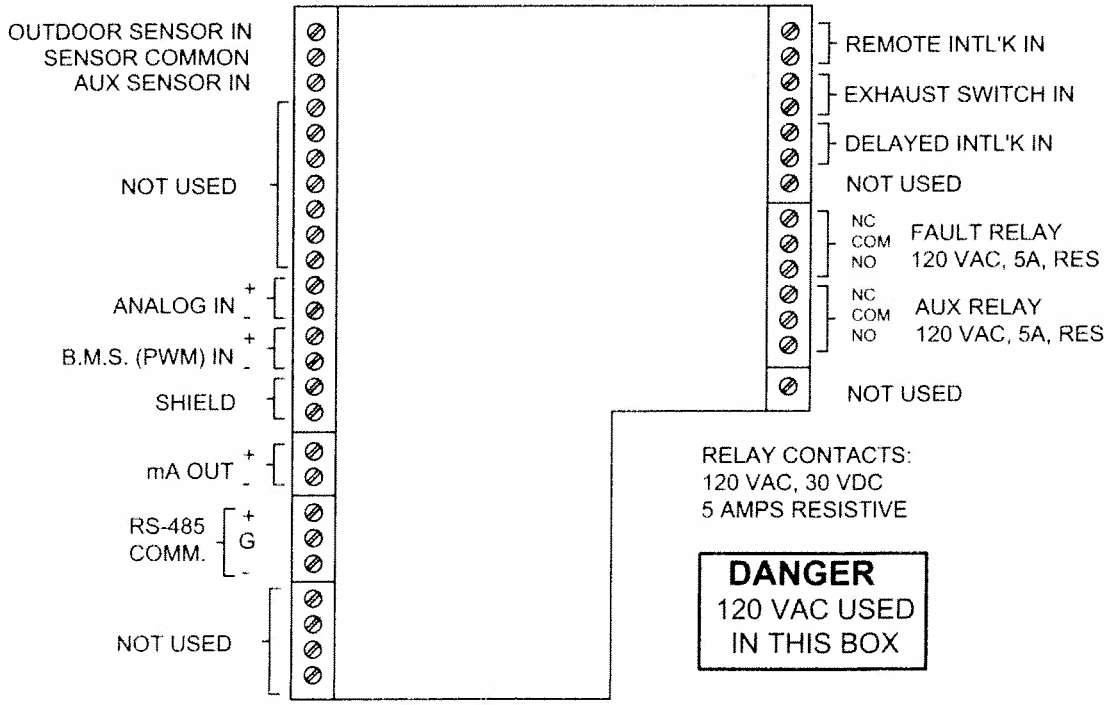

Figure 2-10. I/O Box Terminal Strip

2.9.2 Indoor/Outdoor Reset Mode

This mode of operation increases supply water temperature as outdoor temperatures decrease. An outside air temperature sensor (AERCO Part No. 122790) is required. The sensor MUST BE wired to the I/O Box wiring terminals (see Figure 2-10). Refer to paragraph 2.10.1 for additional information on outside air temperature sensor installation.

2.9.3 Boiler Management System Mode

NOTE

BMS Model 168 can utilize either pulse width modulation (PWM) or RS485 Modbus signaling to the Boiler. BMS II Model 5R5-384 can utilize only RS485 signaling to the Boiler.

When using an AERCO Boiler Management System (BMS), the field wiring is connected between the BMS Panel and each Boiler's I/O Box terminal strip (Figure 2-10). Twisted shielded pair wire from 18 to 22 AWG must be utilized for the connections. The BMS Mode can utilize either pulse width modulation (PWM) signaling, or RS485 Modbus signaling. For PWM signaling, connections are made from the AERCO Boiler Management System to the B.M.S. (PWM) IN terminals on the I/O Box terminal strip. For RS485 Modus signaling, connections are made from the BMS to the RS485 COMM terminals on the I/O Box terminal strip. Polarity must be maintained and the shield must be connected only at the AERCO BMS. The boiler end of the shield must be left floating. For additional instructions, refer to Chapter 5, paragraph 5.6 in this manual. Also, refer to GF-108M (BMS Model 168) and GF-124 (BMS II Model 5R5-384), BMS -Operations Guides.

2.9.4 Remote Setpoint and Direct Drive Modes

The boiler can accept several types of signal formats from an Energy Management System (EMS), Building Automation System (BAS) or other source, to control either the setpoint (Remote Setpoint Mode) or firing rate (Direct Drive Mode) of the Boiler. These formats are:

- 4 to 20 mA/1 to 5 VDC
- 0 to 20 mA/0 to 5 VDC
- PWM – (Pulse Width Modulated signal. See para. 2.10.4)
- Network (RS485 Modbus. See para. 2.10.7)

While it is possible to control a boiler or boilers using one of the previously described modes of operation, it may not be the method best suited for the application. Prior to selecting one of these modes of operation, it is recommended that you consult with your local AERCO representative or the factory for the mode of operation that will work best with your application. For more information on wiring the 4 to 20 mA / 1 to 5VDC or the 0 to 20 mA / 0 to 5 VDC, see paragraph 2.9.3.

2.9.5 Combination Mode

NOTE

Only BMS Model 168 can be utilized for the Combination Mode, not the BMS II (Model 5R5-384).

With a Combination Mode unit, field wiring is between the unit's I/O Box wiring terminals, the CCP (Combination Control Panel), and the BMS (Boiler Management System). The wiring must be accomplished using twisted-shielded pair wire from 18 to 22 AWG. Polarity must be maintained. For further instructions and wiring diagrams, refer to the GF-108M Boiler Management System Operations Guide and the CCP-1 data sheet.

2.10 I/O BOX CONNECTIONS

The types of input and output signals and devices to be connected to the I/O Box terminals shown in Figure 2-10 are described in the following paragraphs.

CAUTION

DO NOT make any connections to the I/O Box terminals labeled "NOT USED". Attempting to do so may cause equipment damage.

2.10.1 OUTDOOR SENSOR IN

An outdoor air temperature sensor (AERCO Part No. 122790) will be required primarily for the Indoor/Outdoor reset mode of operation. It can also be used with another mode if it is desired to use the outdoor sensor enable/disable feature. This feature allows the boiler to be enabled or disabled based on the outdoor air temperature.

The factory default for the outdoor sensor is DISABLED. To enable the sensor and/or select an enable/disable outdoor temperature, see the Configuration menu in Chapter 3.

The outdoor sensor may be wired up to 200 feet from the boiler. It is connected to the OUTDOOR SENSOR IN and SENSOR COMMON terminals in the I/O Box (see Figures

2-9 and 2-10). Wire the sensor using a twisted shielded pair wire from 18 to 22 AWG. There is no polarity to observe when terminating these wires. The shield is to be connected only to the terminals labeled SHIELD in the I/O Box. The sensor end of the shield must be left free and ungrounded.

When mounting the sensor, it must be located on the North side of the building where an average outside air temperature is expected. The sensor must be shielded from direct sunlight as well as impingement by the elements. If a shield is used, it must allow for free air circulation.

2.10.2 AUX SENSOR IN

The AUX SENSOR IN terminals can be used to add an additional temperature sensor for monitoring purposes. This input is always enabled and is a view-only input that can be seen in the Operating Menu. The sensor must be wired to the AUX SENSOR IN and SENSOR COMMON terminals and must be similar to AERCO BALCO wire sensor Part No. 12449. A resistance chart for this sensor is provided in Appendix C.

2.10.3 ANALOG IN

The ANALOG IN + and – terminals are used when an external signal is used to drive the firing rate (Direct Drive Mode) or change the setpoint (Remote Setpoint Mode) of the Boiler.

Either a 4 to 20 mA /1 to 5 VDC or a 0 to 20 mA/ 0 to 5 VDC signal may be used to vary the setpoint or firing rate. The factory default setting is for 4 to 20 mA / 1 to 5 VDC, however this may be changed to 0 to 20 mA / 0 to 5 VDC using the Configuration Menu described in Chapter 3. If voltage rather than current is selected as the drive signal, a DIP switch must be set on the PMC Board located inside the Control Box. Contact the AERCO factory for information on setting DIP switches.

All of the supplied signals must be floating (ungrounded) signals. Connections between the signal source and the Boiler's I/O Box must be made using twisted shielded pair wire from 18 to 22 AWG, such as Belden 9841 (see Figure 2-10). Polarity must be maintained. The shield must be connected only at the source end and must be left floating (not connected) at the Boiler's I/O Box.

Regardless of whether voltage or current is used for the drive signal, they are linearly mapped to a 40°F to 240°F setpoint or a 0% to 100% firing rate. No scaling for these signals is provided

2.10.4 B.M.S. (PWM) IN

NOTE

Only BMS Model 168 can utilize Pulse Width Modulation (PWM), not the BMS II (Model 5R5-384).

These terminals are used to connect the AERCO Boiler Management System (BMS) to the unit. The BMS utilizes a 12 millisecond, ON/OFF duty cycle. This duty cycle is Pulse Width Modulated (PWM) to control firing rate. A 0% firing rate = a 5% ON pulse and a 100% firing rate = a 95% ON pulse.

2.10.5 SHIELD

The SHIELD terminals are used to terminate any shields used on sensor wires connected to the unit. Only shields must be connected to these terminals.

2.10.6 mA OUT

These terminals provide a 4 to 20 mA output to the VFD to control the rotational speed of the blower. This function is enabled in the Configuration Menu (Chapter 3, Table 3.4).

2.10.7 RS-485 COMM

These terminals are used for RS-485 MODBUS serial communication between the unit and an external "Master" such as a Boiler Management System (BMS), Energy Management System (EMS), Building Automation System (BAS) or other suitable device.

2.10.8 EXHAUST SWITCH IN

These terminals permit an external exhaust switch to be connected to the exhaust manifold of the boiler. The exhaust switch should be a normally open type switch (such as AERCO Part No. 123463) that closes (trips) at 500°F.

2.10.9 INTERLOCKS

The unit offers two interlock circuits for interfacing with Energy Management Systems and auxiliary equipment such as pumps or louvers. These interlocks are called the Remote Interlock and Delayed Interlock (Figure 2-10). The wiring terminals for these interlocks are located inside the I/O Box on the unit front panel. The I/O Box cover contains a wiring diagram which shows the terminal strip locations for these interlocks (REMOTE INTL'K IN and DELAYED INTL'K IN). Both interlocks,

described below, are factory wired in the closed position.

NOTE

Both the Delayed Interlock and Remote Interlock MUST be in the closed position to allow the unit to fire.

2.10.9.1 REMOTE INTERLOCK IN

The remote interlock circuit is provided to remotely start (enable) and stop (disable) the Boiler, if desired. The circuit is labeled REMOTE INTL'K IN and is located inside the I/O Box on the front panel. The circuit is 24 VAC and is factory pre-wired in the closed (jumpered) position.

2.10.9.2 DELAYED INTERLOCK IN

The delayed interlock is typically used in conjunction with the auxiliary relay described in paragraph 2.10. This interlock circuit is located in the purge section of the start string. It can be connected to the proving device (end switch, flow switch etc.) of an auxiliary piece of equipment started by the Boiler's auxiliary relay. The delayed interlock must be closed for the boiler to fire.

If the delayed interlock is connected to a proving device that requires time to close (make), a time delay (Aux Start On Dly) that holds the start sequence of the boiler long enough for a proving switch to make can be programmed. Should the proving switch not prove within the programmed time frame, the boiler will shut down. The Aux Start On Dly can be programmed from 0 to 120 seconds. This option is locate in the Configuration Menu (Chapter 3, Table 3-4).

2.10.10 FAULT RELAY

The fault relay is a single pole double throw (SPDT) relay having a normally open and normally closed set of relay contacts that are rated for 5 amps at 120 VAC and 5 amps at 30 VDC. The relay energizes when any fault condition occurs and remains energized until the fault is cleared and the CLEAR button is depressed. The fault relay connections are shown in Figure 2-10.

2.11 AUXILIARY RELAY CONTACTS

Each Boiler is equipped with a single pole double throw (SPDT) relay that is energized when there is a demand for heat and de-energized after the demand for heat is satisfied. The relay is provided for the control of auxiliary equipment, such as pumps and louvers, or can be used as a Boiler status indictor (firing or not firing). Its contacts are rated for 120 VAC @ 5 amps. Refer to Figure 2-10 to locate the AUX RELAY terminals for wiring connections.

2.12 FLUE GAS VENT INSTALLATION

The minimum allowable vent diameter for a single Benchmark 2.0LN Boiler is 8 inches.

The AERCO Benchmark Venting and Combustion Air Guide, GF-2050, must be consulted before any flue gas vent or inlet air venting is designed or installed. U/L listed, positive pressure, watertight vent materials as specified in AERCO's GF-2050, must be used for safety and code compliance. Since the unit is capable of discharging low temperature exhaust gases, horizontal sections of the flue vent system must be pitched back to the unit a minimum of 1/4 inch per foot to avoid condensate pooling and allow for proper drainage.

The combined pressure drop of vent and combustion air systems must not exceed 140 equivalent feet of 8 inch ducting. Fittings as well as pipe lengths must be calculated as part of the equivalent length.

For a natural draft installation the draft must not exceed ±0.25 inch W.C. These factors must be planned into the vent installation. If the maximum allowable equivalent lengths of piping are exceeded, the unit will not operate properly or reliably.

The Heatfab Division of the Selkirk Corporation provides vent systems which conform to all applicable requirements for installations within the Commonwealth of Massachusetts. Contact information for this supplier are as follows:

Selkirk Corporation
Heatfab Division
130 Industrial Blvd.
Turners Falls, MA 01376
Phone: 1-800-772-0739
www.heat-fab.com

2.13 COMBUSTION AIR

The AERCO Benchmark Venting and Combustion Air Guide, GF-2050 MUST be consulted *before* any flue or combustion supply air venting is designed or implemented. Combustion air supply is a direct requirement of ANSI 223.1, NFPA-54, and local codes. These codes should be consulted before a permanent design is determined.

The combustion air must be free of chlorine, halogenated hydrocarbons, or other chemicals that can become hazardous when used in gas-

fired equipment. Common sources of these compounds are swimming pools, degreasing compounds, plastic processing and refrigerants. Whenever the environment contains these types of chemicals, combustion air must be supplied from a clean area outdoors for the protection and longevity of the equipment.

The AERCO Benchmark 2.0LN Boiler is UL listed for 100% sealed combustion. It can also be installed using room air, provided there is an adequate supply. (See para. 2.13.3 for more information concerning sealed combustion air). If the sealed combustion air option is not being used, an inlet screen will be attached at the air inlet on the top of the unit

The more common methods of supplying combustion air are outlined below. For more information concerning combustion air, refer to the AERCO Benchmark Venting and Combustion Air Guide, GF-2050.

2.13.1 Combustion Air From Outside the Building

Air supplied from outside the building must be provided through two permanent openings. Each opening must have a free area of not less than one square inch for each 4000 BTU/H boiler input. The free area must take into account restrictions such as louvers and bird screens.

2.13.2 Combustion Air From Inside the Building

When combustion air is provided from within the building, it must be supplied through two permanent openings in an interior wall. Each opening must have a free area of not less than one square inch per 1000 BTU/H of total boiler input. The free area must take into account any restrictions such as louvers.

2.13.3 Sealed Combustion

The AERCO Benchmark 2.0LN Boiler is UL listed for 100%-sealed combustion. For sealed combustion installations, the screen on the air inlet duct of the unit must be removed. The inlet air ductwork must then be attached directly to the unit's air inlet.

In a sealed combustion air application, the combustion air ducting pressure losses must be taken into account when calculating the total maximum allowable venting run. See the AERCO Benchmark Venting and Combustion Air Guide, GF-2050. When using the boiler in a sealed combustion air configuration, each unit must have a minimum 8 inch diameter connection at the unit.